Systematic Research and Implementation of Sinology Knowledge with VR Technology

Dayan Shangguan
Beijing Forestry University, Beijing, P. R. China
Email: Shanggdy@bjfu.edu.cn

Xinyuan Huang
Communication University of China, Beijing, P. R. China

***Abstract*—Virtual Reality (VR) is a developing technology while "sinology" is a traditional science. Nowadays, it is a valuable as well as a rare project to integrate the traditional sinology with vivid VR experience, thus making the content of sinology knowledge more expressive. This thesis, after detailed discussion on integrating mode and ways of sinology and VR technology, develops an interesting and interactive system of sinology study. This system, developed on basis of 3D engine Virtools, brings a series of sinology studies into an interesting game. Additionally, equipped with Wii and programmed in HLSL language, this system presents stereovision effect and stronger interactive experience. This thesis, transferring dull sinology into visualized interactive experience, is a study on integrating mode of traditional sinology culture and VR technology, which possesses significant referential value to the development of other VR interactive systems.**

***IndexTerms*—Virtual Reality, Sinology, Interactive design**

I. Introduction

Virtual Reality (VR) is a developing and comprehensive information technology by the end of 20th century [1]. Virtual Reality, a dynamic 3D vision of multi-source information fusion as well as a system simulation of physical behavior, generates an analog environment through computer, making users enter a virtual space through the help of sense-helmet, data-gloves and other specialized equipments. Users can perceive and operate every object in the visual world so as to get an immersive experience through visual, tactile and auditory [2-4].

VR technology originates from the report "The Ultimate Display" made by Ivan Sutherland in IFIP (International Federation for Information Processing) in 1965. Then during 1980s, Jaron Lanier, one of the founders of American VPL Company, formally put forward the word "Virtual Reality." After 20th century, VR technology, along with XML, JAVA and other advanced technologies, combined with 3D computing power and interactive technology improve rendering quality and transmission speed, thus bringing out a brand new era [5][6].

Immersion, interaction and imagination, considered as the three basic characteristics of VR [7], can bring the users into the lifelike experience more easily and naturally. It creates a world that can interact with people naturally and in which users can explore and remove the objects in real time [8]. Virtual Reality technology is an important aspect of simulation technology. With the integration of simulation technology, computer graphics, human-computer interface technology, multimedia technology, sensor technology, network technology and many others, it has been a very challenging cross-technology [9][10].

Though as a new technology, VR has been applied in many fields such as military, digital entertainment, industrial manufacturing, medical science and education [11-16]. However, it is rarely seen in sinology education. "Sinology", also known as "Chinese studies", means national educational administration and institution of higher education in ancient China [17]. At present, it refers to traditional Chinese culture and learning, including medicine, poetry and prose, painting and calligraphy, and music, etc. Sinology is broad and profound. The traditional way of teaching sinology through written language and lectures lacks enjoyment and interactive experience, thus giving a sense of baldness to young people. Therefore it is an innovative method to apply modern technology to the sinology education and create an interesting interactive experience. The author of this thesis, in order to implement this objective, through systematic analysis on the basic elements of sinology, has built complete system environment. With the combination of motion controller and interactive environment, the system has displayed better user experience. Additionally the system is programmed in High Level Shader Language (HLSL) to realize the stereovision effect. The sinology teaching system "Travel of the BOOKS" not only discusses the dynamic integration of sinology knowledge and VR technology, but also explores a new way to pass on traditional Chinese culture in new times.

Manuscript received December 1, 2013; revised January 6, 2014; accepted January 20, 2014.
Corresponding author：Huang Xinyuan.
This work was sponsored by NMOE (No. 201310022047)

doi:10.4304/jcp.9.3.781-786

II. Design of the Sinology Teaching System

A. Sinology and Design Concept of the System

According to Chinese academic circles, sinology, as a broad and profound subject, is referred as Six Arts and Five Techniques: six arts refer to rites, music, archery, charioteering, calligraphy and mathematics while five techniques refer to practice, Chinese medicine, divination, numerology and observation. During the designing process of this system, four representative elements "calligraphy", "mathematics", "music" and "Chinese medicine" are chosen by the author as the expressive materials. Among these, "calligraphy" corresponds to the "ancient Chinese characters" and "ancient Chinese poetry" in the system while "mathematics", "music" and "Chinese medicine" individually corresponds to different parts like "ancient Chinese math", "instrument identification" and "traditional Chinese medicine". Drawing support from the VR technology, the author has designed vivid and interesting games to lead the learning of the above five subjects. "Ancient Chinese characters" and "ancient Chinese poetry" mainly assess users' knowledge of ancient Chinese characters and poetry, with which the users pass game levels. "Ancient Chinese math" examines users' understanding and knowledge about math in ancient China while "instrument identification" requires users to listen to the classical music and then identify the instruments, which checks users' knowledge about ancient music and instruments. The last one "traditional Chinese medicine", through visualized simulation of traditional Chinese treatment, makes users get a better understanding of the main principles of traditional Chinese medicine. Interactive game is introduced to the whole learning process, and user needs and visual effects are also taken into consideration in choosing the learning materials. Additionally, the "Five Elements" theory in traditional Chinese culture is embodied in the logic and level design. In this system, from the aspect of sight, building and art design, the author also strives to reveal the architectural feature of the "Five Elements" theory to the users.

B. The Structure of the System

The sinology teaching system "Travel of the BOOKS" is a learning software product based on sinology theme, which concludes ancient Chinese poetry, music, medicine, math and "Five Elements" and so on.This system is made up of two parts: software and hardware:

1) Hardware
   1. Input system Wii Remote
   2. Output system Stereo Display and Sound
2) Software
   1. Interactive engine system
   2. Sinology database system

System function graph is shown in figure 1

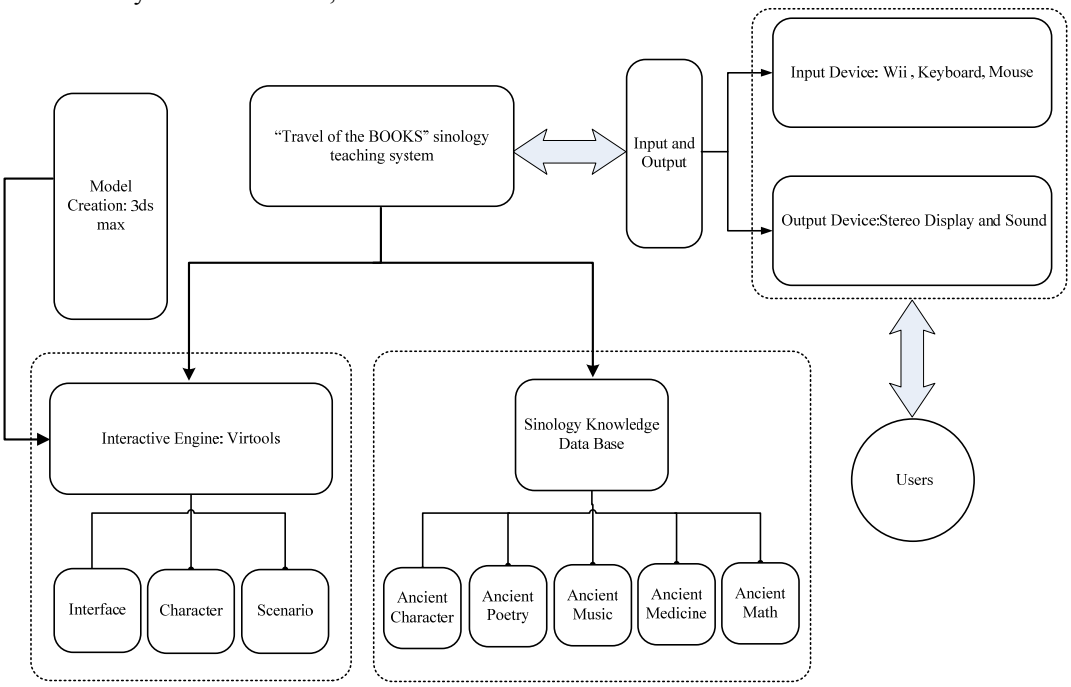

Figure 1: The Sinology Teaching System "Travel of the BOOKS"

As shown in Graph 1, the system adopts Autodesk 3ds Max to create 3D model. Firstly 3ds Max is used to accomplish digital modeling of system scenario and characters and to create art parts like UV editing, material and lighting, baking and rendering. Then the data of 3ds Max is imported into Virtools to conduct interactive design and manufacture. Additionally, 3DVIA Virtools is adopted to develop this learning system. 3DVIA Virtools can provide a complete developing and deploying platform to create interactive 3D software [18]. It can also integrate existing file formats together such as 3D models, 2D graphics and sound effect, and create 3D products for many functions. Virtools has been widely used in many fields such as business show, network browsing, interactive TV, e-learning and stimulating training. Meanwhile, it provides around 500 function modules for developers, namely Building Block (BB). Each Building Block encapsulates behavioral function [19], so the developer only needs to program in Virtools context and the interactive operating purpose will be easily achieved [20]. Virtools excels in the function of making procedure visualized and achieving all functions through the processing connections of Building Blocks.

III. The Design and Implementation of the System Level

The design of the system level of the game "Travel of the BOOKS" is based on the "Five Elements". Therefore the whole system is made up of five levels, each of which represents one element, name as "Water, Fire, Wood, Earth and Gold". In each level, users can find missions concerning sinology, including ancient characters, Chinese medicine, instruments identification, ancient poetry and ancient math. Starting from the main menu, the users enter into the game and come to the main scenario "Water". In order to pass this level, they are required to control the character to answer the questions. After the "Water" level, the players will go on with "Fire", "Wood" and "Earth" level one by one. Every time the players complete the missions of one level, they need to go back to the main scenario to continue the adventure. Eventually they pass the last "Gold" level and complete the first round of sinology learning. The flow chart of level is shown in figure 2

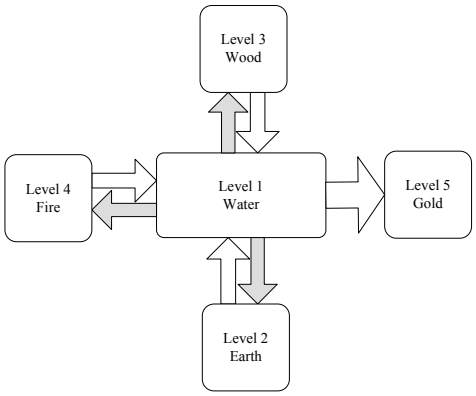

Figure 2: The Flow Chart of the Game Level

In the following part, the learning process through 3 levels of the game will be elaborated.Firstly, the designer takes "water" level as an example to elaborate the interactive design in the system level. This level, based on the "water element", examines users' understanding of ancient Chinese characters. When the users come to the bridge, the lotus throne rises. Then the users need to step on the lotus so that appears the multiple-choice question. All the options are made of a set of numbers or phrases. Based on the knowledge of Chinese characters, the users answer the question and pass the level. There are random 63 questions in the system. In order to pass this level and get the key to the next "Earth" level, the users need to answer 7 questions. When the mission is completed, the picture shown in figure 3 will come out.

Figure 3: The Game Level Scenario

The "Earth" level mainly examines learners' knowledge of "ancient poetry", which concludes random 40 questions. The designer takes one example here to elaborate the details. When the users come to "spiritual earth array", they see a turning array made up of "eight diagrams". There are different poems carved in each circle of the array. According to the first half of the poem given by the system, the users are required to pick one character from each poem in the array and complete the whole poem. During this process, each time the users pick one character, the array will stop turning. When the users have finished the whole sentence correctly, they will arrive at the center of the array and get the key to the next "Wood" level. When the mission is completed, the picture shown in figure 4 will come out.

Figure 4: The Game Level Scenario

The "Wood" level mainly examines users' knowledge of ancient Chinese music. After entering the study, the users will follow the hint to choose one ancient Chinese

instrument among Guqin, Chinese zither, Erhu, Pipa and other instruments. Then the system will play the music which is selected from famous Chinese songs in ancient times such as Homebound Fishermen, High Mountain and Flowing Water, Panssy Vill, Liuyang River and so on. There are 128 songs in all, the users need to listen to 6 songs played randomly and identify their names. Only if the answers are all correct, will they get the key to the next level "Fire". When the mission is completed, the picture shown in figure 5 will come out.

Figure 5: The Game Level Scenario

IV. Input and Output

The traditional man-machine interactive system is based on specific devices, such as mouse, keyboard, data glove, data Suit, etc., making users to issue commands and simultaneously see the results. However, such devices require the users to maintain sitting or standing posture, and to interact with body movement in small range. Thus, the flexibility of interaction is usually absent. As a new interactive controller, the Nintendo's Wii Remote could free the limbs. Additionally the traditional interactive system usually provides flat images with little immersion for users. While the system hereof adopts stereoscopic vision technique, implements stereoscopic graphics display through High Level Shader Language, and keeps users engaged

A. *Wii Remote-based Interaction*

The input device for interaction in this teaching system "Travel of the BOOKS" is Wii Remote. Wii Remote is the primary input controller for Nintendo's Wii console. It communicates wirelessly with the console via short-range Bluetooth radio and provides precise pointing functionality to meet the need of VR. Its design allows the users to interact naturally via pointing or gesture recognition [21]. The technologies used in Wii Remoteare: the infrared sensor, which could capture light in four directions; the accelerometer, which has the ability to sense the acceleration by users; the Bluetooth, which communicates wirelessly with the computer via Bluetooth radio.

1) The Working Principles of Wii Remote

The infrared sensor in the front-end remote could detect position via capturing the lights from the integrated infrared LEDs. Although users wave the remote at the screen, the detection is through analyzing the data which are sent by Bluetooth and reflects the changes of positions collected by the sensor. The computer is responsible for that analyzing process and outputs the results to display unit.

2) The Wii Remote Implementation

The 3D viewpoint controlled by Wii remote is mainly based on the "WiiTools GetAcceleration", which could control the character locomotion by communicating with the Wii Remote accelerometer. In addition, other Building Blocks, such as "WiiTools GetKeys"and "Test", work together to achieve different walkthrough controls of the virtual character through the Cross button. As a basic function of the Wii Remote, the detection of position enables the virtual character to synchronize motions with user body. The scripting languages of Wii Remote are designed as figure 6.

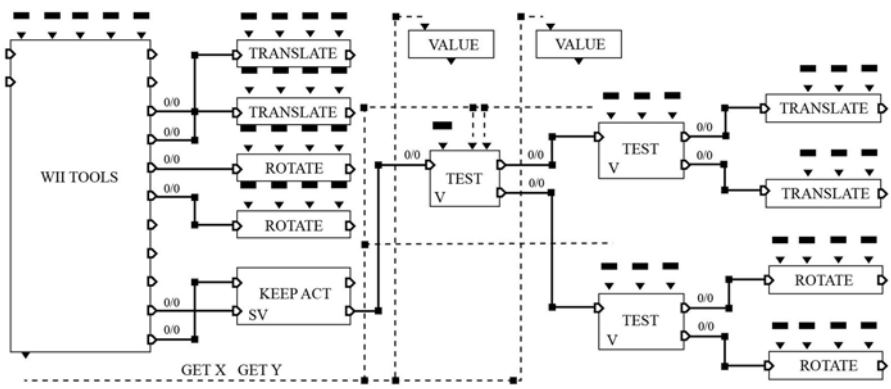

Figure 6: The Scripting Languages Design

B. *The Stereo Vision*

The more level deep one system has, the better immersion one user gets. In the virtual world, as a key technology, the stereo vision is a basic requirement in VR systems. The stereo vision in VR has two aspects of implementation technique: one is the stereo vision technology; the other is the 3D information acquisition technology. In use of the stereo vision technology, "Travel of the BOOKS" has achieved reality effects by establishing a virtual scene in order to give the users better visual experience.

1) The Principle of Stereo Vision

Because each eye is in a different horizontal position, each has a slightly different perspective on a scene yielding different retinal images, which is called binocular parallax. The principle of stereo vision thereof is to follow the binocular parallax to reproduce visual depth [22]. If we use computer image technology to process image pair, we could feel the depth and see the stereo images.

2) The Implementation of Stereo Vision

On the basis of the stereo vision, two cameras are created in Virtools. The space between the cameras is designed for simulating human eyes. The HLSL is used in Virtools for compositing images. Wearing anaglyph glasses (red and cyan), the user could see the stereo images. The figure 7 shows the script of the stereo vision.

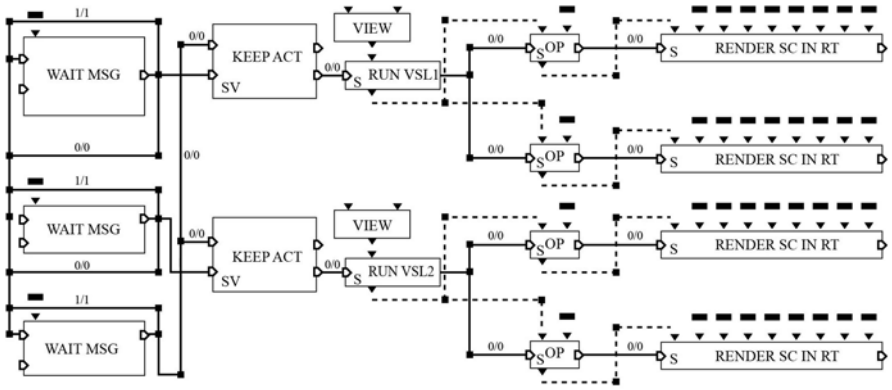

Figure 7: The Script of the Stereo Vision

3) The HLSL Algorithm

The HLSL is used in Virtools to mix images. The "g&b" values of pixels of right eye's image should be mixed with the "r" value retrieved from the pixels of left eye's image. Thus, wearing the anaglyph glasses, user could see the stereo images and feel the depth. The kernel code:

```
Texture leftPicture; // To use texture "leftPicture" to hold the view of left eye.
Texture rightPicture; // To use texture "rightPicture" to hold the view of right eye.
Static float4 outColor={1,1,1,1};
Sampler leftPicSample =Sampler_state
{
   Texture=<leftPicture>;
   MipFilter=LINEAR;
   Minfilter=LINEAR;
   Magfilter=LINEAR;
};
Sampler rightPicSample =Sampler_state
{
   Texture=<rightPicture>;
   MipFilter=LINEAR;
   Minfilter=LINEAR;
   Magfilter=LINEAR;
}
float4 PixelShader(float2 uv:TEXCOORD0):COLOR
   float4 leftColor=tex2D(leftPictureSampler,uv);
   float4 rightColor=tex2D(rightPictureSampler,uv);
   outColor.r=leftColor.r;
   outColor.g=rightColor.g;
   outColor.b=rightColor.b;
return outColor;
}
```

V. CONCLUSIONS

As a developing technology, Virtual Reality illustrates a good prospect of vast application. In this thesis, the combination of sinology and virtual reality was studied, and a complete set of software "Travel of the BOOKS" was developed with Virtools. Filled with information on sinology, this system, supported by stereo vision technology and the Wii Remote interaction controller, turns the monotonous learning process into an interesting interactive travel. As a strong contrast, the combination of VR technology and sinology supplies a new method for carrying forward Chinese tradition in the present era. Additionally the implementation of the VR System has positive referential significance for the innovation and development of other VR systems. More VR systems combined with sinology knowledge are expected to make traditional Chinese culture to live long and prosper. .

ACKNOWLEDGEMENTS

This work was supported in part by the Beijing Forestry University Young Scientist Fund, under Grant (BLX2009012). This research was supported by The Fundamental Research Funds for the Central Universities (RW2013-45). We also thank anonymous referees and the editor-in-chief.

REFERENCES

[1] Zhou Qianxiang, Jiang Shizhong, Jiang Guohua,"Comments on Virtual Reality Reseach and Its Development Trends," *Computer Simulation*, Vol. 20, No. 7, 2003, pp. 1~4.
[2] Chen Haolei, Zou Xiangjun, Liu Tianhu, "Overview of the advance in virtual reality technology," *Science Paper Online*, Vol. 6, No. 1, 2011, pp. 1677.
[3] Steuer J, "Defining virtual reality: dimensions determining telepresence," *Journal of Communication*, Vol. 4, No. 24, 1992, pp. 73-93.
[4] Shou-xiang Zhang, "Augmented Reality on Long-wall Face for Unmanned Mining," *Journal of Computers*, Vol. 6, No. 6, 2011. pp. 1213-1221.
[5] Han Xiaoling, "Present situation and development about VR," *Computer Knowledge and Technology*, Vol. 1, No.2, 2007, pp. 549-550.
[6] Wang Jianmei, Zhang Xu, Wang Yong, Zhao Yunhua. " Development Status and Policy of the Virtual Reality Technology of United States and their Enlightenment to China," *Science and Technology Management Research*, 2010, No. 14, pp. 37-40.
[7] Song Xi, "Virtual reality for arts and design education," 2010 IEEE 11th International Conference on Computer-Aided Industrial Design and Conceptual Design, NO. 1, 2010, pp. 679-682.
[8] Yan Zhang, Xun Zhang, Li Lin, "Effectiveness Assessment on Urban Planning Analyzed in Virtual Reality Environments," *Journal of Software*, Vol. 8, NO. 1, January 2013, pp. 78-84.
[9] Zou Xiangjun, Sun Jian, HE Hanwu, "The development and prospects of virtual reality, " *Journal of System Simulation*, Vol. 16, No. 9, 2004, pp. 1905-1909.
[10] Forley J D, "Interfaces for advanced computing," *Scientific American*, Vol. 257, No. 4, 1987, pp. 127-135.
[11] Cheng-jun Chen, Yi-qi Zhou, "Virtual Reality-based Chemical Process Simulation of Pipeline System," *Journal of Software*, Vol. 7, NO. 4, April 2012, pp. 786-791.
[12] Londero A, Viaud-Delmon I, Baskind A, "Auditory and visual 3D virtual reality therapy for chronic subjective tinnitus: theoretical framework," *Virtual Reality*, Vol. 14, No. 2, 2009, pp. 143-151.
[13] Luciano C, Banerjee P, DeFant T, "Haptics-based virtual reality periodontal training Simulator," *Virtual Reality*, Vol. 13, No. 2, 2009, pp. 69-85.
[14] Hongwei Gao, Yu Yang, Kun Hong, Bin Li, "Vision Guided Modeling and Simulation for CAS Rover," *Journal of Computers*, Vol. 9, No. 1, 2014, pp. 126-133.
[15] Yu-Li Chen, "A Study on Student Self-efficacy and Technology Acceptance Model within an Online Task-based Learning Environment," *Journal of Computers*, Vol. 9, No. 1, 2014, pp.34-43.
[16] Wang Linlin, Liu Hongli, "Summer Palace under virtual reality," *Journal of Capital Normal University*, Vol. 30, No. 1, 2009, pp. 76-82.
[17] Zhang Liwen, "The New Vision and Interpretation of Sinology," *Journal of Renmin University of China,* Vol. 1 2006, pp. 1-8.
[18] Liu Qiang, " Design of interactive 3D exhibition system based on Virtools," *International Journal of Digital Content Technology and its Applications*, Vol. 23, No. 6, 2012, pp. 201-207.
[19] Fu Zhaoguo, Wang Tianwei, Ni Xiaopeng, Lin Lizong, "The Virtual Reality Technology and Its Application in Special Equipment Education Based on Virtools, " *Computer Engineering & Science*, Vol. 34, No. 6, 2012, pp. 97-100.
[20] Liu Jinlin, Zeng Fanming, "Study on Virtual Maintenance Training Technology for The Marine Power Plant", *Ship Science and Technology*, Vol. 30, No. 6, Dec, 2008, pp. 140-142.
[21] Wei Jinchao, "Shadow Animation System Base on Wii Remote Controller, " XIAN University of Science and Technology, 2012.
[22] Chiang, Jen Shiun, Hsia, Chih Hsien, Hsu, Hung Wei. "A stereo vision-based self-localization system," IEEE Sensors Journal, Vol. 5, No. 13, 2013, pp. 1677.

Dayan Shangguan was born in 1979. He received a master's degree in 2009 from Peking University. Now he is a lecturer in the School of Information Science and Technology of Beijing Forestry University. His research interests include VR Technology and Computer-Supported Cooperative Work, etc.

Xinyuan Huang was born in 1965. He received the Ph.D. degree in 1991 from Beijing Institute of Technology. Now he is a professor in School of Animation and Digital Arts of Communication University of China. His research interests include VR Technology and Computer-Supported Cooperative Work, etc.