Diagnosis Model Based on Least Squares Support Vector Machine Optimized by Multi-swarm Cooperative Chaos Particle Swarm Optimization and Its Application

Guojun Ding
School of Electrical Engineering, Beijing Jiaotong University, Beijing, China
Email:okdgj@163.com

Lide Wang, Peng Yang, Ping Shen
School of Electrical Engineering, Beijing Jiaotong University, Beijing, China
Email :{ ldwang, 11121699, pshen}@bjtu.edu.cn

Shuping Dang
School of Electrical &Electronic Engineering, the University of Manchester, Manchester, UK
Email: shuping.dang@gmail.com

***Abstract*—The classification accuracy of the least squares support vector machine (LSSVM) models strongly depends on proper setting of its parameters. An optimal selection approach of LSSVM parameters is put forward based on multi-swarm cooperative chaos particle swarm optimization (MCCPSO) algorithm. Chaos particle swarm optimization (CPSO) can improve the ability of local search optimization with good robust and adaptable. Multi-swarm cooperative particle swarm optimization (MCPSO) algorithm is master-slave heuristic method with a good global search. Then the MCCPSO-LSSVM diagnosis model is used to diagnosing analog circuit fault. Simulation results show that MCCPSO algorithm can jump out of local optimums with fast convergence and good stability. Results for analog circuit fault diagnosis show that the proposed method has strong robustness, and high accuracy.**

***Index Terms*—LSSVM; parameter optimization; particle swarm optimization; analog circuit; multi-swarm cooperative chaos particle swarm optimization**

I. INTRODUCTION

Support vector machine (SVM) is a new machine learning technique with advanced statistical learning theory system. It uses structural risk minimization principle instead of empirical risk minimization principle, which can seek the best compromise between model complexity and ability with limited sample information. SVM effectively resolves the problem of small sample size, high dimension and nonlinearity problem [1-6]. But for practical engineering application, the shortage that approximation algorithm and multifarious classification don't operate as well as two classes classification and less speed of training, will lead to a decreasing generalization of SVM [7]. LSSVM is an improved algorithm based on SVM [8]. Due to a quadratic loss function in LSSVM replacement for the insensitive loss function in classical SVM, the solution follows from solving a set of linear equations, instead of quadratic programming, and simplifies the complexity of computing [9-11].

However, the parameter selection of LSSVM relies on the experience and spreadsheets, and different parameters have great influence on accuracy and generalization ability of the model. There is no fixed method for LSSVM parameter selection; and the main methods by means of the experiment to determine the parameters. It becomes a hot topic to search available methods for LSSVM parameter optimization [12-16].

Particle swarm optimization (PSO) algorithm is a heuristic global search algorithm, which has been successfully applied in many problems such as multi-objective optimization [17], fault diagnosis [18], automatic target detection [19], mechanical design [20], neural network training [21], pattern recognition [22], signal processing [23], speech recognition [24], and robotics and time-frequency analysis with its good performance [25]. But standard PSO tends to search premature solutions in optimization problems. In order to solve the problem, MCCPSO algorithm is proposed to optimize the parameters of LSSVM. Finally, MCCPSO-LSSVM model is applied to diagnose analog circuit fault using PSPICE and MATLAB software. Simulation results of optimization algorithm compared with other

This work was supported by the Fundamental Research Funds for the Central Universities, China (E11JB00310, E12JB00140).
Corresponding author: Guojun Ding (okdgj@163.com).

doi:10.4304/jcp.8.4.975-982

methods show that the MCCPSO-LSSVM model has superiority in analog circuits fault diagnosis.

II. MATHEMATICS MODEL OF LSSVM

Assume S is a training set for the problem of two-class classification, which can be expressed as [26]:

$$S = \{(x_i, y_i), x_i \in R^n, y_i \in \{-1,+1\}\}_{i=1}^{l}$$

Where x_i is the *i*-th input mode, y_i is a class index matching x_i, and l is the size of sample. The proposed two-class classification problem is to resolve the decision function $y(x) = sign(f(x))$, which has a form of:

$$f(x) = w^T \phi(x) + b \tag{1}$$

Where $\phi(\cdot)$ represents a mapping from input space to feature space, while coefficient vector w, and bias term *b* is unknown quantity. The unknown quantities can be resolved by an optimization problem described below.

$$\min_{w,b,\varepsilon} Q(w,b,\varepsilon) = \frac{1}{2}\|w\|^2 + \frac{\gamma}{2}\sum_{i=1}^{l} e_i^2 \tag{2}$$

$$y_i(w^T\phi(x_i) + b) = 1 - e_i, i = 1,2,...,l \tag{3}$$

The Lagrange function of optimization problem is:

$$\begin{aligned} L(w,b,e,a) &= Q(w,b,e) \\ &-\sum_{i=1}^{l} \alpha_i \left[y_i \left(w^T \phi(x_i) + b \right) - 1 + e_i \right] \end{aligned} \tag{4}$$

Where $a_i \ (i = 1,2,...,l)$ is multiplier of Lagrange function. The KKT conditions of (4) are:

$$\begin{cases} \dfrac{\partial L}{\partial w} = 0 \Rightarrow w - \sum_{i=1}^{l} a_i y_i \phi(x_i) = 0 \\ \dfrac{\partial L}{\partial b} = 0 \Rightarrow \sum_{i=1}^{l} y_i a_i = 0 \\ \dfrac{\partial L}{\partial e_i} = 0 \Rightarrow \gamma e_i - a_i = 0 \\ \dfrac{\partial L}{\partial a_i} = 0 \Rightarrow y_i \left(w^T \phi(x_i) + b \right) - 1 + e_i = 0 \end{cases} \tag{5}$$

$i = 1,2,...,l$

It can also be expressed as a matrix as follows:

$$\begin{bmatrix} I & 0 & 0 & -Z^T \\ 0 & 0 & 0 & -y^T \\ 0 & 0 & \gamma I & -I \\ Z & y & I & 0 \end{bmatrix} \begin{bmatrix} w \\ b \\ e \\ a \end{bmatrix} = \begin{bmatrix} 0 \\ 0 \\ 0 \\ \vec{I} \end{bmatrix} \tag{6}$$

Where $Z = \left[y_1\phi(x_1), y_2\phi(x_2), \ldots, y_l\phi(x_l) \right]^T$, $y = \left[y_1, y_2, \ldots, y_l \right]^T$, $\vec{I} = \left[1,1,\ldots,1 \right]^T$, $e = \left[e_1, e_2, \ldots, e_l \right]^T$, $a = \left[a_1, a_2, \ldots, a_l \right]^T$.

Where variable ω and e are eliminated after an equivalent transforms and (6) can be simplified with the combination of Mercer condition as:

$$\begin{bmatrix} 0 & -y^T \\ y & \Omega + \gamma^{-1} I \end{bmatrix} \begin{bmatrix} b \\ a \end{bmatrix} = \begin{bmatrix} 0 \\ \vec{I} \end{bmatrix} \tag{7}$$

Where $\Omega_{ij} = y_i y_j K(x_i, x_j)$ .Assume $A = \Omega + \gamma^{-1} I$, and solve (6), the result is:

$$b = \frac{y^T A^{-1} \vec{I}}{y^T A^{-1} y} \tag{8}$$

$$a = A^{-1}\left(\vec{I} - by \right) \tag{9}$$

Considering (5), $w = \sum_{i=1}^{l} a_i y_i \phi(x_i)$. Then conclusion is drawn from classification function (1):

$$f(x) = \sum_{i=1}^{l} a_i y_i K(x, x_i) + b \tag{10}$$

Where $K(x, x_i)$ is the kernel function.

The typical kernel function includes Polynomial kernel function, Radial Basis Function (RBF) and Sigmoid kernel function.

Polynomial: $K(x_i, y_i) = ((x_i, x_j) + 1)^q, q = 1,2,...$

RBF: $K(x_i, y_i) = \exp(-\dfrac{\|x_i - x_j\|}{2\sigma^2})$

Sigmoid: $K(x_i, y_i) = \tan((x_i, y_i) + c)$

Among them, RBF has been proved to gain better generalization and performance. So RBF is chosen as kernel function in this paper. The normalization parameter γ and kernel function parameter σ^2 are required to optimize.

III. MCCPSO ALGORITHM

A. Standard PSO Algorithm and Its Weakness

PSO algorithm is introduced by Kennedy and Eberhart in 1995[27-28], due to its simple concept, easy to implement, less dependent parameters, robustness and other characteristics, and has been applied in many fields.

The technique simulates the moving of social behavior among particles through a multi-dimensional search space, each particle representing a single intersection of all search dimensions. Each particle moves in the direction of its previously best position and its best global position to discover the optimal solution. Define each particle as a potential solution to a problem in D-dimensional space. Then, the updating of velocity and particle position can be obtained using the following equations [29]:

$$v_{id} = \omega v_{id} + c_1 r_1 (p_{id} - x_{id}) + c_2 r_2 (p_{gd} - x_{id}) \quad (11)$$

$$v_{id} = x_{id} + v_{id} \quad (12)$$

Where d is the *d-th* dimension of a particle, ω is the inertia coefficient. v_{id} and x_{id} is the current velocity and position of the particle i respectively. c_1 and c_2 are the positive constants called acceleration coefficients which control the maximum step size. r_1 and r_2 are two random numbers between (0,1) . p_{id} represents the best previous position of particle i. p_{gd} represents the best position among all particles in the population;

But similar to other smart algorithms, PSO algorithm is still easy to fall into premature convergence and poor local searching capability.

B. MCCPSO Algorithm

In recent years, many improved PSO algorithms are proposed to optimize standard PSO algorithm; CPSO and MCPSO are proved to be better optimization algorithms for PSO algorithms [30-34]. However, the CPSO algorithm has some drawbacks, such as tolerance, easily trapped into local minima, global search efficiency is low, and the convergence rate is slow and less accuracy [35]. And the MCPSO algorithm is poor in local search. In order to get the optimal capability, combined ergodicity of chaos theory with the standard particle swarm optimization are introduced to increase the adaptability and diversity of the particles. The global search ability of the new algorithm is improved by adjusting the master - slave parameters as improve the search capabilities of the local details through adjust CPSO parameters. The typical chaos Logistic mapping is as follows [36]:

$$y_{n+1} = \mu y_n (1 - y_n) \text{ ,(n=0,1,2,...,} 0 \le \mu \le 4) \quad (13)$$

Where μ and y_n are chaos factor and real-valued sequence, n is the number of iterations. When μ is between $3.5714 \le \mu \le 4$, the equation value cycle becomes infinite then the result equations are uncertain, and the Logistic mapping in a chaotic state. p_g is mapped in domain[0,1] .And the Logistic equation can be described as follows:

$$y_1 = (p_g - R_{\min}) / (R_{\max} - R_{\min}) \quad m = 1, 2, ..., M \quad (14)$$

Where $R_{\max}$ and $R_{\min}$ are the upper and lower limit of p_g in the (14).Then get the chaos sequence $y=(y_1, y_2, ..., y_m)$ by M iterations of Logistic equation. And the (14) constitute the following equation.

$$p_{g,m} = R_{\min} + y_m (R_{\max} - R_{\min}) \quad m=1,2,...,M \quad (15)$$

Finally, a new particle feasible solution sequence can be described as follows:

$$p^*_{g,m} = (p^*_{g,1}, p^*_{g,2}, ..., p^*_{g,m}) \quad (16)$$

In master – slave model, each slave swarm executes a single CPSO algorithm or its variants, including the update of position and velocity, and the creation of a new local population. When all the slave swarms are ready with the new generations, each slave swarm then sends the best local individual to the master swarm. The master swarm selects the best of all received individuals and evolves according to the following equations:

$$v^M_{id} = v^M_{id} + c_1 r_1 (p^M_{id} - x^M_{id}) + \phi c_2 r_2 (p^{*M}_g - x^M_{id}) + (1-\phi) c_3 r_3 (p^{*Q}_g - x^M_{id}) \quad (17)$$

$$x^M_{id} = x^M_{id} + v^M_{id} \quad (18)$$

For a minimization problem, ϕ is a migration factor, given by

$$\phi = \begin{cases} 0, G^{*Q}_{best} < G^{*M}_{best} \\ 0.5, G^{*Q}_{best} = G^{*M}_{best} \\ 1, G^{*Q}_{best} > G^{*M}_{best} \end{cases} \quad (19)$$

Where M is the master swarm; Qs are the other slave swarms; c_3 is acceleration constant; r_3 is random number between(0,1) ; p^{*M}_g is the best previous particle in master swarm; p^{*Q}_g is the best previous particle in slave swarms; G^{*M}_{best} is the fitness values determined by p^M_g ; G^{*Q}_{best} is the fitness values determined by p^{*Q}_g .

IV. THE PROCEDURE OF MCCPSO-LSSVM DIAGNOSIS MODEL

The MCCPSO-LSSVM algorithm is described in steps as follows:

Step 1: Set the parameters, and initialize the chaos master and chaos slave swarms with random positions and velocities.

Step 2: LSSVM model is trained with the normalization parameter γ and kernel function parameter σ^2 included in current particle. The MCCPSO includes 3 slave swarms and 1 master swarm, which offers the best compromise between computational cost and reliable parameter estimates for evaluate fitness. The training data set is randomly divided into 5 mutually exclusive subsets of approximately equal size, in which 4 subsets are used as the training set and the last subset is used as validation. In every chaos slave swarm, compute the object function value of each particle. Select

the best particle of each slave swarm after chaos optimization according to (15) and (16).

Step 3: Take current particle of each chaos slave swarm as individual extreme point of every particle and do the particle with minimal fitness value as the global extreme point.

Step 4: Calculate the inertia weight of each chaos slave swarm according to (17) and (18). Select the best particle of each chaos slave swarm, Update the particle velocity and position of slave swarms, and complete the adaptive mutation of the slave swarms according to the (19).The fitness function is defined as the $1\text{-}M_{cc}$ of the MCCPSO algorithm method on the training data set, which is shown in (20) .the solution with a bigger fitness, has a smaller fitness value.

$$F=1\text{-}M_{cc}=1\text{-}\frac{1}{N}\sum_{i=1}^{N}\left(\frac{k_c}{k_c+k_i}\right)*100\% \qquad (20)$$

Where k_c and k_i are the numbers of correctly and incorrectly classified examples. M_{cc} is the correctly classified rate. Select the best particle of each slave swarm after chaos optimization, and form the master swarm.

Step 5: Update the velocity and position of particles in the master swarm, and make the particles chaos fully, then calculate the fitness value.

Step 6: Update the global and personal best according to the fitness evaluation results.

Step 7: The same procedures from **Step2-6** are repeated until stop conditions are satisfied (Up to the number of iterations or meet the fitness value).

Step 8: The sample of test are input the MCCPSO-LSSVM model to classify.

The flowchart of the MCCPSO-LSSVM algorithm is described in Fig. 1.

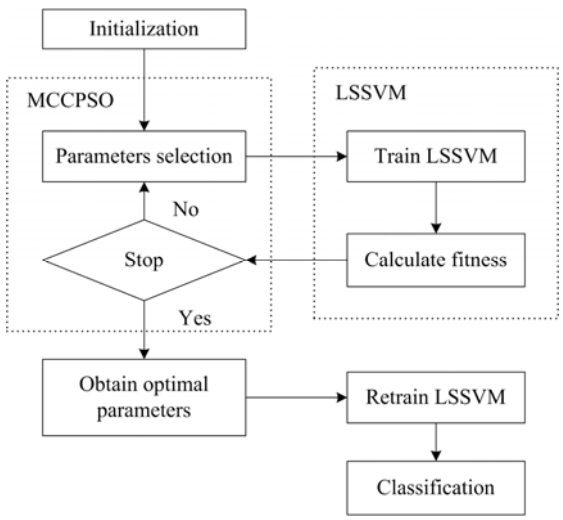

Figure 1. Flowchart of MCCPSO-LSSVM diagnosis model

V. Application of MCCPSO-LSSVM in Analog Circuit Fault Diagnosis

A. Sallen-Key Band-pass Filter

In order to verify the superiority of the proposed model, the simulations of analog circuit fault diagnosis are carried out. The first simulation circuit is a Sallen-Key band-pass filter with 25 kHz center frequency, and 50 kHz bandwidth frequency [37-39]. The diagnosis circuit includes 5 resisters and 2 capacities. Parameter nominal values are shown in the Fig. 2, and the standard tolerance is ±5% for resisters and is ±10% for capacities. The excitation signal is 10us square wave signal with the amplitude is 5V .The diagnosed components are R2, R3, C1 and C2, which concluded by sensitivity analysis on circuits.

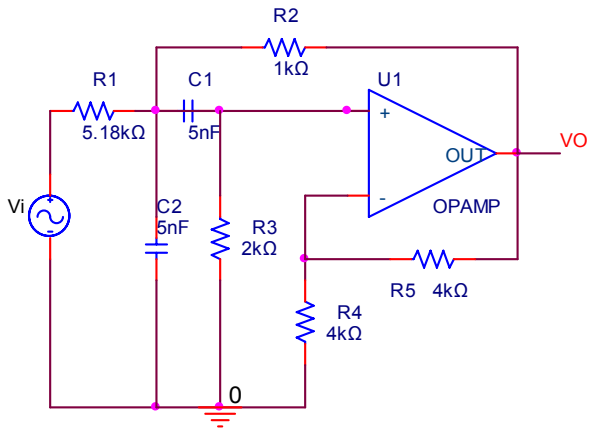

Figure 2. Sallen-Key band-pass filter

TABLE I.
TABLLE OF BAND-PASS FILTER FAULT TYPES

Fault serial number	Fault type	Nominal value	Fault value
1	NF	--	--
2	R2↑	1kΩ	[1.05kΩ,1.5kΩ]
3	R2↓	1kΩ	[500Ω,950Ω]
4	R3↑	2kΩ	[2.1kΩ,3kΩ]
5	R3↓	2kΩ	[1kΩ,1.9kΩ]
6	C1↑	5nF	[5.5nF,7.5nF]
7	C1↓	5nF	[2.5nF,4.5nF]
8	C2↑	5nF	[5.5nF,7.5nF]
9	C2↓	5nF	[2.5nF,4.5nF]

Define the diagnosis circuit is NF (no fault class) when the parameter values of diagnosed components changes between the range of tolerance. The soft fault of Sallen-Key band-pass filter circuit composed of nine kinds soft fault types together, as well as NF. Table I shows the detail information of fault serial number, fault types and the signs of ↑ and ↓ represents 50% increase or decrease in component nominal value. We assume that all components preform in the range of tolerance except the failure one when a circuit fault happens.

Specific diagnosis procedures according to the **Step1-Step8** are as follows:

Monte Carlo analysis is carried out for the test circuit by using the ORCAD Pspice software. Then the discrete points in the amplitude curve are collected as the fault features of Sallen-Key band-pass filter, and 50 points in each response voltage in interval [1k, 150k]. 100 times analyses are carried on for each fault type, and 900 fault response signal samples are achieved; and 600 samples are used as training set, while other 300 samples as diagnosis sets. "1-v-1"LS-SVM multiclass classifier is applied to the training set, and then 36 two-class classifications LS-SVM are trained. The choice of normalization parameter γ and kernel function parameter σ^2 in LS-SVM has a great influence on the correction rate of fault diagnosis. Monte Carlo analysis of Sallen-Key band-pass filter is used to analyzing fitness of different parameters optimization method. The global optimum fitness curves of the four parameter optimization methods are shown in Fig. 3. Compared with PSO algorithm, CPSO algorithm and MCPSO algorithm, the proposed MCCPSO algorithm has the best optimize speed and train accuracy, which the deviation of convergence is under 1% after 165 generation training steady.

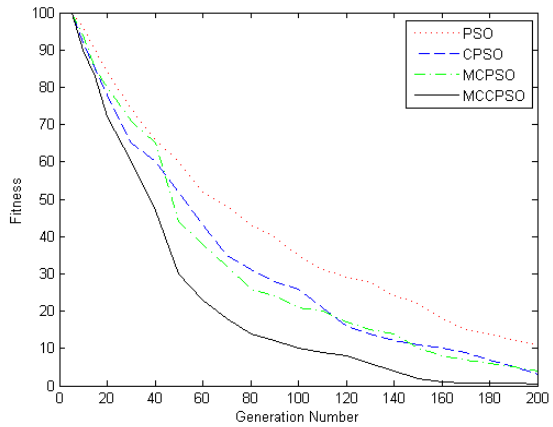

Figure 3. The fitness value during the training stage

The optimized parameters γ and σ^2 of LSSVM by MCCPSO algorithm is shown in TABLE II. All the simulation results by software of Matlab R2010a on PC (CPU: Intel core i3, 3.1GHz, Memory 2GB).

TABLE II.
TABLLE OF PART DIAGNOSIS ACCURACY BY DIFFERENT ALGORITHMS

LSSVM Number	γ	σ^2	Diagnosis accuracy of PSO-LSSVM(%)	Diagnosis accuracy of CPSO-LSSVM(%)	Diagnosis accuracy of MCCPSO-LSSVM(%)
1	89.34	0.78	93.5	98.6	99.6
2	108.43	0.34	87.4	97.6	99.5
3	78.45	1.07	89.8	99.5	99.3
4	124.35	1.24	93.5	93.5	99.1
5	105.50	0.67	92.1	94.6	99.8
6	129.25	0.34	97.3	95.5	99.5
7	90.45	0.98	89.6	94.6	99.6
8	82.89	1.34	90.7	98.1	99.5
…	…	…	…	…	…
30	167.39	1.56	92.5	98.6	99.5
31	107.47	0.83	86.5	94.6	99.4
32	156.09	1.04	94.6	95.6	98.7
33	45.86	1.39	98.7	95.8	99.8
34	117.47	0.56	84.5	97.6	99.6
35	98.14	0.87	87.6	94.8	99.1
36	97.35	1.20	88.9	95.7	99.1

The statistics results of classification correct rate and location fault correct rate are shown Fig. 4 and Fig. 5, as well as comparison with the Back Propagation (BP) neural network [40], PSO-LSSVM [41] and CPSO-LSSVM method [42].

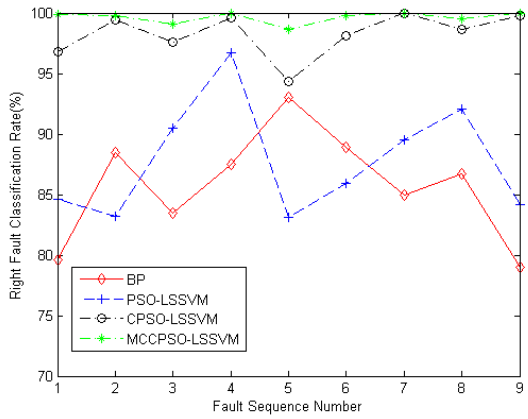

Figure 4. Right classification rate of different algorithms

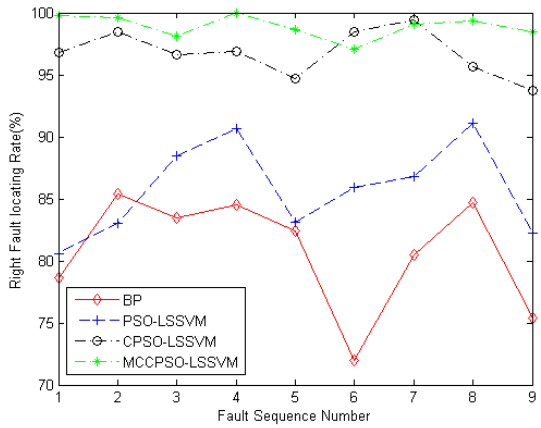

Figure 5. Right fault locating rate of different algorithms

From Fig. 4 and Fig. 5 can be seen that the proposed model correct rate of fault detection is 99.45% and correct rate of fault location is 97.86%. The diagnosis result shows that MCCPSO-LSSVM model has the best effect on correct rate of fault detection and fault location than any other models discussed in other papers. The proposed model shows better than BP, PSO-LSSVM and CPSO-LSSVM model for the fault diagnosis of analog circuit soft faults, and the proposed model gains a stronger robustness and high diagnosis accuracy.

B. Electrocardiogram Enlarges Circuit

The second simulation circuit is an electrocardiogram enlarges circuit (Fig. 6) [43]. The circuit composed of four operational amplifiers, 10 resistors and a capacitor, the tolerance of resistance and capacitance are10% and 5%, respectively. Different from the previous example, eight kinds of circuit hard fault are set, and the short-circuit faults of C1, R2, R6 and R10 and the open-circuit faults of R1, R4, R5 and R7.

The simulation under identical conditions with the previous example, and the input signal is modulation frequency signal with the bias voltage is 4V, the peak amplitude is 2V, carrier frequency is 30HZ, modulation frequency is 3HZ and the modulation factor is 3.The output signal is collected under different fault conditions, respectively. The BP neural network, PSO-LSSVM, CPSO-LSSVM and MCCPSO-LSSVM diagnosis method are used to diagnosing each fault model, and the results is shown in TABLE III.

Simulation result of TABLE III shows that the BP neural network costs the longest average training time and gains the poorest correct rate of fault detection and fault location; CPSO-LSSVM model performs better than the model BP neural network and PSO-LSSVM, but is not as good as MCCPSO-LSSVM model. MCCPSO-LSSVM gets the best fault diagnosis capability with less training time.

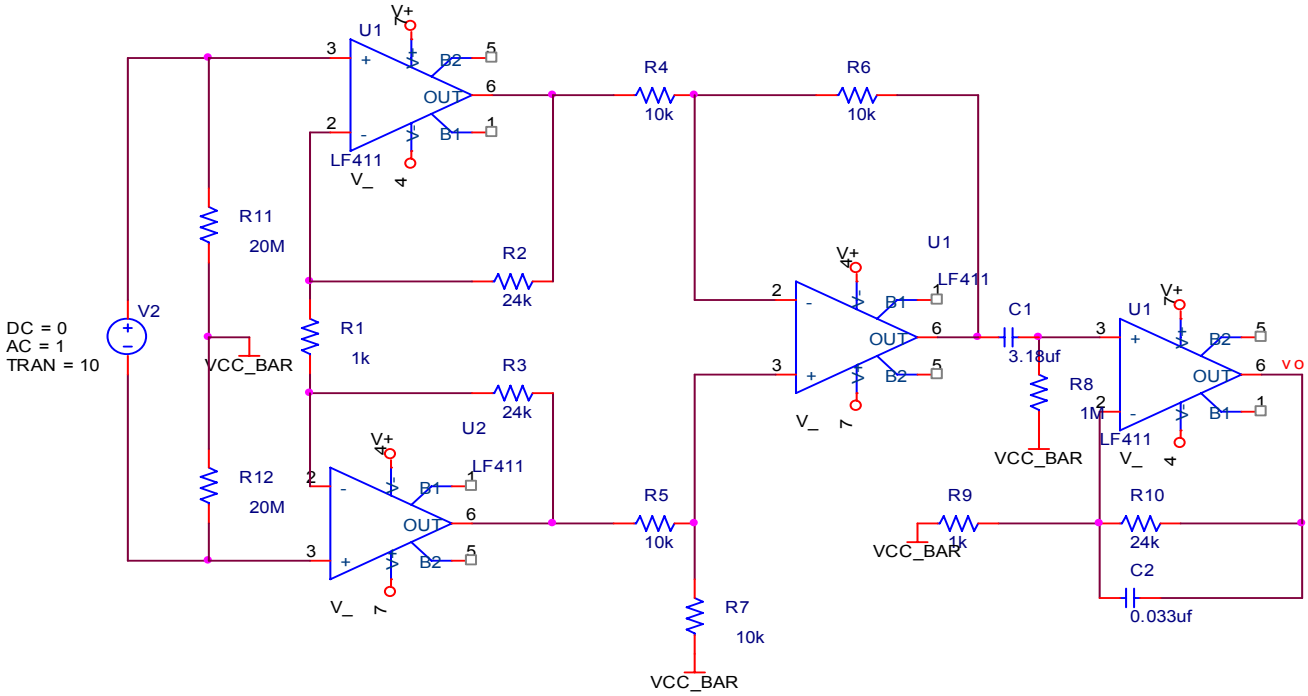

Figure 6. Electrocardiogram enlarges circuit

TABLE III.
SIMULATION RESULTS OF FAULT DIAGNOSIS

Diagnosis method	Average training time(s)	Correct rate of fault detection (%)	Correct rate of fault location (%)
BP neural network	43.58	79.74	72.96
PSO-LSSVM	2.56	86.09	82.76
CPSO-LSSVM	1.92	96.25	90.81
MCCPSO -LSSVM	2.18	98.92	96.89

VI. CONCLUSION

A diagnosis model based on multi-swarm cooperative chaos particle swarm optimization algorithm and LSSVM is put forward. The correct rate of fault diagnosis is improved, compared with other fault diagnosis models. The proposed model has proved the best effect upon the robustness and stability. A good generalization of LSSVM and high efficiency of MCCPSO algorithm also contributes to the high performance of the model. Simulation results on analog circuits fault diagnosis show that this model has high classification ability, robustness, and good generalization ability, and it can diagnose and locate the fault of analog circuit quickly. In summary, MCCPSO-LSSVM diagnosis model can forecast and diagnose the potential fault of analog circuit, and has a great generalization ability and practicality.

REFERENCES

[1] Vapnik V, "*The Nature of Statistical Learning Theory*", Springer, New York, 1995.
[2] Vapnik V, "*Statistical Learning Theory*", Wiley, New York, 1998.

[3] Hweijen Lin,Jihpin Yeh, "Optimal reduction of solutions for support vector machines", *Applied Mathematics and Computation*, vol. 214, pp.329-335,2003.
[4] Achmad Widodo, Bosuk Yang, "Support vector machine in machine condition monitoring and fault diagnosis", *Mechanical Systems and Signal Processing*, vol.21, pp.2560-2574, 2007.
[5] Li Jian, "A combination of PSO and SVM for road icing forecast", *Journal of Computers*, vol.5, pp.1372-1379, 2010.
[6] Taian Liu, Yunjia Wang, Yinlei Wang, Wentong Liu, "The new development in support vector machine algorithm theory and its application", *Journal of Software*, vol.6, pp.273-280, 2011.
[7] Guangying Yang,Shanxiao Yang,"Study of emotion recognition based on surface electromyography and improved least squares support vector machine", *Journal of Computers*, vol. 6, pp.1707-1714,2011.
[8] Suykens J A K,Vandewalle J, "Least squares support vector machine classifiers", *Neural Processing Letters*, vol. 9, pp. 293-300, 1999.
[9] Guo Wei,Geng Li,Yan Wu,Xingwu Long,"Application of least squares support vector machine in system-level temperature compensation of ring laser gyroscope", *Measurement*, vol. 6, pp.1898-1903,2011.
[10] J.A.K. Suykens, J.Vandewalle, "Least squares support vector machine classifiers", *Neural Processing Letters*, vol.9, pp.293-300, 1999.
[11] J.A.K. Suykens, T.Van Gestel,J. De Brabanter, B.De Moor,J.Vandewalle,"*Least Squares Support Vector Machines*", World Scientific,Singapore,2002.
[12] Glauber Souto dos Ssantos,Luiz Guilherme Justi Luvizotto,Viviana Cocco Mariani, Leandro dos Santos Coelho, "Least squares support vector machines with tuning based on chaotic differential evolution approach applied to the identification of a thermal process", *Expert Systems with Applications*, vol. 39, pp. 4805-4812, 2012.
[13] Shaohua Jiang, Weihua Gui, Chunhua Yang, Xianjiang Dai, "Fault diagnosis method based on rough set and least squares support vector machine and its application", *Journal of Central South University (Science and Technology)*, vol. 40, pp. 447-451, 2009.
[14] Xiaoli Li, Pengcheng Nie, Zhengjun Qiu, Yong He, "Using wavelet transform and multi-class least square support vector machine in multi-spectral imaging classification of Chinese famous tea", *Expert Systems with Applications*, vol. 38, pp. 11149-11159, 2011.
[15] Na Li, Heng Yang, Zhijian Qu, Gang Yang, "Traction Motor Simulation Model of Electric Locomotive Based on Improved Least Squares Support Vector Machine", *Journal of the China Railway Society*,vol.33, pp. 23-27,2011.
[16] Tatjana Eitrich, Bruno Lang, "Efficient optimization of support vector machine learning parameters for unbalanced datasets", *Journal of Computational and Applied Mathematics*, vol.196, pp. 425-436, 2006.
[17] A.A.Mousa,M.A.EI-Shorbagy,W.F.Abd-EI-Wahed, "Local search based hybrid particle swarm optimization algorithm for multiobjective optimization", *Swarm and Evolutionary Computation*,vol.3,pp.1-14,2012.
[18] Chenglin Zhao, Xuebin Sun, Songlin Sun, Ting Jiang, "Fault diagnosis of sensor by chaos particle swarm optimization algorithm and support vector machine", *Expert Systems with Applications*, vol. 38, pp. 9908-9912, 2011.
[19] Hai Shen,Yunlong Zhu,Li Jin,Haifeng Guo, "Lifecycle-based swarm optimization method for constrained optimization", *Journal of Computers*, vol. 6, pp.913-922,2011.
[20] Weider Chang,Daiming Chang, "Design of a high-order digital differentiator using a particle swarm optimization approach", *Mechanical Systems and Signal Processing*, vol. 22, pp.233-247,2008.
[21] S.Y.S.Leung,Yang Tang,W.K.Wong,"A hybrid particle swarm optimization and its application in neural network", *Expert Systems with Applications*, vol. 39, pp. 395-405, 2012.
[22] Peng-yeng Yin,"Particle swarm optimization for point matching", *Journal of Visual Communication and Image Representation*, vol. 17, pp. 143-162, 2006.
[23] Ulrich Kirchmaier, Simon Hawe, Klaus Diepold, "Dynamical information fusion of heterogeneous sensors for 3D tracking using particle swarm optimization", *Information Fusion*, vol. 12, pp. 275-283, 2011.
[24] Negin Najkar,Farbod Razzazi,Hossein Sameti,"A novel approach to HMM-based speech recognition systems using particle swarm optimization", *Mathematical and Computer Modelling*, vol. 52, pp. 1910-1920, 2010.
[25] T.K.Ho, C.W.Tsang,K.H.lp, K.S.Kwan, "Train service timetabling in railway open markets by particle swarm optimization", *Expert Systems with Applications*, vol. 39, pp. 861-868, 2012.
[26] Wei Huang, Fengchen Huang, Jing Song, "Water quality retrieval and performance analysis using Landsat thematic mapper imagery based on LS-SVM", *Journal of Software*, vol.6, pp.1619-1627, 2011.
[27] Kennedy J, Eberbart R, "Particle swarm optimization", *Proceedings of IEEE International Conference on Neural Networks*, pp.1942-1948, 1995.
[28] Kennedy J, Eberbart R C.A, "Discrete binary version of the particle swarm algorithm", *Proceedings of IEEE International Conference on Systems, Man, and Cybernetics*, pp.4104-4108, 1997.
[29] Liangyou Shu,Lingxiao Yang, "A modified PSO to optimize manufacturers production and delivery", *Journal of Software*, vol.7, pp.2325-2332, 2012.
[30] Dekun Tan,"Research of Nonlinear Constrained Optimization Problems with Chaos Particle Swarm Optimization", *Energy Procedia*, vol. 13, pp.5503-5507, 2011.
[31] Liyeh Chuang, Chihjen Hsiao, Chenghong Yang, "Chaotic particle swarm optimization for data clustering ", *Expert Systems with Applications*, vol. 38, pp. 14555-1463, 2011.
[32] Ben Niu, Yunlong Zhu, Xiaoxian He, Hai Shen, "A multi-swarm optimizer based fuzzy modeling approach for dynamic systems processing", *Neurocomputing*, vol. 71, pp. 1436-1448, 2008.
[33] Niu B, Zhu Y L, He X X, Wu H, "MCPSO: A Multi-Swarm Cooperative Particle Swarm Optimizer", *Applied Mathematics and Computation*, vol. 185, pp. 1050-1062, 2007.
[34] Yuanning Liu, Gang Wang, Huiling Chen, et al., "An Improved Particle Swarm Optimization for Feature Selection", *Journal of Bionic Engineering*, vol. 8, pp. 191-200, 2011.
[35] Wenli Du, Hailong Zhang, Feng Qian,"Chaotic particle swarm optimization algorithm with harmony search for industrial applications", *Journal of Tsinghua University (Science and Technology)*, vol.52, pp.325-330, 2012.
[36] Wei Liang, Laibin Zhang, Mingda Wang, "The chaos differential evolution optimization algorithm and its application to support vector regression machine", *Journal of Software*, vol.6, pp.1297-1304, 2011.

[37] Aminian M, Aminian F, "Neural-network based analog-circuit fault diagnosis using wavelet transform as preprocessor", *IEEE Transactions on Circuit and System II: Analog and Digital Signal Processing*, vol. 47, pp. 151-156, 2000.
[38] Aminian M, Aminian F, "Fault diagnosis of analog circuit using Bayesian neural networks with wavelet transform as preprocessor", *Journal of Electronic Testing: Theory and Applications*, vol. 17, pp. 29-36, 2001.
[39] Jing Tang, Yunan Hu, Zhicai Xiao, "Optimization of Analog Circuit Fault Diagnosis Parameters based on SVM and Genetic Algorithm", *Advances in information Sciences and Service Sciences*, vol. 4, pp. 42-50, 2012.
[40] Long Wang,Yanheng,Liu,Xiaoguagn Li,Jian Guan, Qi Song, "Analog circuit fault diagnosis based on distributed neural network", *Journal of Computers*,vol.5, pp. 1747-1754 , 2010.
[41] Longfu Zhou,Yibing Shi,Yanjun Li, "PSO method for diagnosis of single soft fault in analog circuit with tolerance", *Journal of Computer Aided Design & Computer Graphics*,vol.21, pp.1270-1274,2009.
[42] Xianlun Tang, Ling Zhuang, Jun Cai, Changbing Li, "Multi-fault classification based on support vector machine trained by chaos particle swarm optimization", *Knowledge-Based Systems*, vol. 23, pp. 486-490, 2010.
[43] Junfang Liu, "*Research and Realization of Fault Diagnosis System of Analog Circuit Based on Wavelet Packet Analysis and Binary Tree Support Vector Machines*", Northeastern University, Shen Yang, China, pp.59, 2008.

Guojun Ding was born in Shangqiu, Henan Province, China, in 1986.He received the Bachelor of Engineering degree in Electrical Engineering and Automation from Beijing Jiaotong University, Beijing, China, in 2007.He is currently a doctoral candidate in the School of Electrical Engineering at Beijing Jiaotong University. His current research interests include feature selection, machine learning, artificial intelligent algorithms and data mining algorithms.

Lide Wang was born in Jinzhou, Liaoning Province, China, in 1960. He received the B.S. and M.S. degrees in electrical engineering from Southwest Jiaotong University, China, in 1982 and 1986, respectively. From 1988 to 1991, he was an electric engineer in Beijing railway bureau, engaged in power converters and fault detection on electric locomotives. Since 1992, he worked at the School of Electrical Engineering, Beijing Jiaotong University, China, where he is currently a Professor and the Director of the Industrial Automation Teaching and research Group. He has responsible for developing over 50 projects for DC/DC converters, fault detection and recording system, electronic controlling system in a novel locomotive, remote control network, industry communication network et al. Some of his research results have been widely used. He joined CPES (Center for Power Electronic Systems) in VPEC (Virginia Power Electronic Center, U.S.A) from Mar. 8th, 1999, as a Research Scholar. He is a member of China Electric Technology Society and a member of China Railway Society. His research interests include control electronics for drives, decision support systems and expert systems; He is author and co-author of more than 100 journals and conference papers in recent years.

Peng Yang was born in Datong, Shanxi Province, China, in 1989. He received B.E. degree from Beijing Jiaotong University in 2011. Currently he is pursuing Master's degree in the School of Electrical Engineering at Beijing Jiaotong University. He has been involved in several research projects related to virtual instrument and rail transit. His research interests include fault diagnosis, reliability analysis and test automation.

Ping Shen was born in Qingdao, Shandong Province, China, in 1962. She is an associate professor in school of Electrical and Engineering, Beijing Jiaotong University. She received her B.S. degree from Southwest Jiaotong University, China, in 1982.And she is pursuing her PhD degree in Electrical Engineering currently. Her research interests include embedded database and its application, control network and multimedia data transmission technology.

Shuping Dang was born in Nanning, Guangxi Province, China. He is currently a student in school of Electrical & Electronic Engineering at the University of Manchester .His current research field covers circuit design, power line communication.