An Arc Fault Detection Method Based on Wavelet Feature Extraction and the Design & Realization by LabWindows/CVI

Qiongfang Yu[1,2]
1 Hebei Province Key Laboratory of Measurement Technology and Instrumentation, Yanshan University, Qinhuangdao Hebei, China
Email: yuqf@hpu.edu.cn

Dezhong Zheng[1], Yi Yang[2] and Aihua Dong[2]
2 School of Electrical Engineering & Automation, Henan Polytechnic University, Jiaozuo Henan, China
Email: qhdzdz@sina.com, yangyi@hpu.edu.cn, dah@hpu.edu.cn

***Abstract*—Arc fault is one of the primary reasons that cause electrical fire. When arc fault occurs in power supply line, the current can not make protective equipments act and the arc fault can not be found and cut off easily, so electrical fire comes into being. In the comparisons, the current signal is used for the detection physical parameter and the wavelet transform is used to study the arc fault detection. First according to the select principle of wavelet singularity detection, select and construct orthogonal quadratic spline wavelet as wavelet function, and use the porous algorithm dyadic wavelet transform to realize wavelet transform fast algorithm. Then carried out the arc fault's wavelet singularity detection through modulus maxima detection method, finally analyzed the current signal by the method of wavelet approximation. LabWindows/CVI is used as development platform to design and implement the above analysis. Based on LabWindows/CVI, the upper computer program uses multithreading technology to detect and analyze the current signal. By arc fault detection algorithm, the system judges whether there has arc fault or not. The algorithm judges whether there has arc fault or not through detect if there has periodicity singularity points or not. The experiments show that this detection method of arc fault can detect arc fault in power supply circuits exactly and efficaciously.**

***Index Terms*—arc fault; wavelet feature extraction; LabWindows/CVI; wavelet transform; on-line detection; periodicity singularity point; algorithm**

I. INTRODUCTION

With China's rapid economic development, the loss of property caused by fire is increased in the same pace with GDP. According to the budget study by World Fire Statistics Centre (WFSC) and European Communities (EC), if the economic loss caused by fire account for 1% of GDP, the loss of the entire fire will account for more than 20% of GDP[1]. In recent years, the incidence of fire is increasing in China. From 1997 to 2004, electrical fire occurred more than 220 thousand, the casualties exceeded to 9 thousand and the property loss went beyond 35 billion[2]. So study on the detection of electrical fire has very positive significance.

In low voltage power circuits, there are some reasons that cause arc fault, such as electrical leakage, grounding, and bad contact, etc. the current value of arc fault can not make protective equipments act and form the arc fault's continuously burning, so cause the electrical fire and huge damages.[3-5]

Scholars at home and abroad all devote to the study of the arc fault's characteristic. The arc fault's hazards understood by foreign scholars earlier, the theoretical study of the low-pressure arc began in the 1970s, many scholars deeply researched on the arc fault's mathematical model [6-8] and its features [9-11]. The foreign scholars first set up the mathematical model of arc (L.NieM ayr, J .P.Novak and A.D.Stokes), then in subsequent studies, research the voltage and current waveforms' characteristic of arc fault in the circuits[12], and design the devices which can cut off the arc fault [13-15]. But most of these mathematical models which they built are based on the statistical data's empirical formulae, can not solve the arc fault's actual physical characteristics in the low voltage apparatus.

Regard the arc fault as the major reason of the electrical fire and set up special programs to research, domestic scholars did not give adequate attention, the studies of the arc's detection mostly focus on electric arc furnace, high-voltage electrical apparatus and arc-welding, etc [16-18].

Detection on the arc fault comprehensively and effectively is the study of this article. Based on the arc model's analysis and experimental study, the current signal is used for the detection physical parameter and the wavelet transform is used to study the arc fault detection. First according to the select principle of wavelet singularity detection, select and construct orthogonal

Supported by the Ph.D. Programs Foundation of Ministry of Education of China(No. 2006021600); the Key Scientific and Technological Project of Henan Province(No. 0624460012).
Corresponding author: Qiongfang Yu, Email:yuqf@hpu.edu.cn.

doi:10.4304/jcp.8.2.417-424

quadratic spline wavelet as wavelet function, and use the porous algorithm dyadic wavelet transform to realize wavelet transform fast algorithm. Then carried out the arc fault's wavelet singularity detection through modulus maxima detection method, finally analyzed the current signal by the method of wavelet approximation.

LabWindows/CVI is used as development platform to design and implement the above analysis. AT89S51 Single Chip Microcomputer is used as lower computer, based on LabWindows/CVI, the upper computer program uses multithreading technology to detect and analyze the current signal. By arc fault detection algorithm, the system judges whether there has arc fault or not. The algorithm judges whether there has arc fault or not through detect if there has periodicity singularity points or not. The experiments show that this detection method of arc fault can detect arc fault in power supply circuits exactly and efficaciously.

II. Basic Ideas of the New Arc Fault Detection Method

A. The Determination of Detection Physical Parameters

At present, there are many physical parameters for the detection of arc, such as temperature, arc etc. Because the sensors used to detect these parameters must be installed in the place where the arc fault occurs, but the location of arc fault occurs is uncertain, so it is inconvenient to comprehensively detect arc fault in the power supply line.

In the buildings' power lines, electrical load in power supply line is basically resistive, then inductive, on the whole, is the large resistive and small inductive loads. So the voltage or current can be used as detection physical parameters. If the voltage is selected as detection parameter, then the devices used to detect arc fault's voltage must be installed at the both ends of the place where the arc fault occurs. But this way can not detect the arc fault which caused by leakage or grounding, etc. So this paper selected the current as arc fault's physical parameter, it not only can reflects the characteristics of arc fault, but also the detective devices can be easily installed in the supply line in the easy position.

B. The Arc Fault Online Detective System

In order to avoid the fire caused by arc fault, it must realize the arc fault online detection. Figure 1 is the arc fault online detection schematic diagram. In Fig.1, detective system use fieldbus communication technology RS-485 to transmit the detected signal to host computer by slave, then host computer transmit the signal to PC. PC real-time analyze the current signal which sent by detective devices based on the arc fault detective algorithm, once find arc fault, the related actions immediately aroused and alarming.

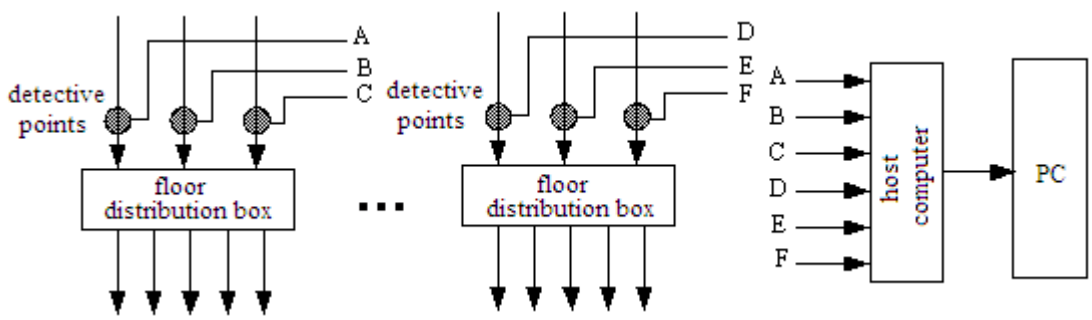

Figure 1. Arc fault online detection schematic diagram

III Study To Arc Fault Detection Based On Wavelet Transform

The wavelet transform has the nature of spatial localization, which is the signal's wavelet transform in somewhere is decided by the local information near this point. So the wavelet transform should be able to better analyze the location of the signal singularity and the strength of the singularity. The paper use wavelet transform to analyze the singularity of the current signal, to decide whether the arc current signal re-ignite or extinguish, ultimately realize the detection of arc fault. [19]

In order to use wavelet transform singularity detection to realize the detection of arc fault, first need to build a suitable wavelet function, and process wavelet transform coefficients through arc fault online detection algorithm, then determine whether there has arc fault in current signal or not.

According to signal's wavelet singularity detection theory and the characteristics of arc information, the orthogonal quadratic spline wavelet is selected as arc signal extraction wavelet functions, so first need to construct the orthogonal quadratic spline wavelets. As overall consider, wavelet filtering method is needed to realize the wavelet transform fast algorithm, so when construct wavelet function, the wavelet function is constructed as wavelet filter in the wavelet coefficients form.

A. *The Construction of Wavelet Function*[20]

The idea of the construction of dyadic wavelet is: suppose $\hat{h}(\omega)$ 、 $\hat{\tilde{h}}(\omega)$ as low-pass filter and $\hat{g}(\omega)$ 、 $\hat{\tilde{g}}(\omega)$ as high-pass filter, scaling function with limited energy and wavelet ϕ 、 $\tilde{\phi}$ 、 ψ 、 $\tilde{\psi}$, if it is proved that $\psi(t)$ is a dyadic wavelet, then it is the wanted. $\tilde{\psi}(t)$ is its reconstruction wavelet. Whether $\psi(t)$ is dyadic wavelet, there has the following sufficient condition:

If there has $A>0$ and $B>0$, makes:

$$A(2-\left|\hat{h}(\omega)\right|^2)\le\left|\hat{g}(\omega)\right|^2\le B(2-\left|\hat{h}(\omega)\right|^2) \qquad (1)$$

and if ϕ is belongs to $L^2(R)$, there has the following relationship established:

$$\sqrt{2}A(\left|\hat{\phi}(2^{-l-1}\omega)\right|^2-\left|\hat{\phi}(2^j\omega)\right|^2)\le\left|\hat{\psi}(2^j\omega)\right|^2\le\sqrt{2}B(\left|\hat{\phi}(2^{-l-1}\omega)\right|^2-\left|\hat{\phi}(2^j\omega)\right|^2) \qquad (2)$$

Command l,k both close to $+\infty$, then can gain $\sqrt{2}A\le\sum_{j=-l}^{k}\left|\hat{\psi}(2^j\omega)\right|^2\le\sqrt{2}B$. So $\psi(t)$ is dyadic wavelet.

In order to reduce the number of unknowns in equations, generally suppose $\phi=\tilde{\phi}$, this is clearly equivalent to $h=\tilde{h}$. Then the solving equations can be simplified as:

$$\begin{cases}\hat{\phi}(\omega)=\dfrac{1}{\sqrt{2}}\hat{h}(\omega/2)\hat{\phi}(\omega/2)\\ \hat{\psi}(\omega)=\dfrac{1}{\sqrt{2}}\hat{g}(\omega/2)\hat{\phi}(\omega/2)\\ \hat{\tilde{\phi}}(\omega)=\dfrac{1}{\sqrt{2}}\hat{\tilde{g}}(\omega/2)\hat{\phi}(\omega/2)\\ \left|\hat{h}(\omega)\right|^2+\hat{\tilde{g}}(\omega)\hat{g}^*(\omega)=2\end{cases} \qquad (3)$$

if suppose further $\psi=\tilde{\psi}$, this is clearly equivalent to $g=\tilde{g}$, then in this case, equation(3) can be turned to:

$$\begin{cases}\hat{\phi}(\omega)=\dfrac{1}{\sqrt{2}}\hat{h}(\omega/2)\hat{\phi}(\omega/2)\\ \hat{\psi}(\omega)=\dfrac{1}{\sqrt{2}}\hat{g}(\omega/2)\hat{\phi}(\omega/2)\\ \left|\hat{h}(\omega)\right|^2+\left|\hat{g}(\omega)\right|^2=2\end{cases} \qquad (4)$$

The wavelet meet to equation (4) is called orthogonal dyadic wavelet.

There are many kinds of wavelet functions, but when used in singularity detection, the wavelet must has the characteristics of finite compact support, symmetry and first-order vanishing moment. Because the quadratic spline wavelet is basically consistent with the above characteristics, and converges to Canny operator's m-order cardinal, the quadratic spline wavelet is selected to detect the signal singularity, solved according to equation 4.

B. *Arc Fault'S Wavelet Singularity Detection*

The arc fault detection method is to select the orthogonal quadratic spline wavelet as wavelet function, real time dyadic wavelet transform to current signal in power line, analyze whether there has the periodic singularity point in wavelet transform coefficients or not, if there has, then the arc fault is identified occurred, and timely alarming. Porous algorithm is used in wavelet transform.

This paper analyze 'signal' as the example. This signal is collected by the TipPiescope-HS801 digital oscilloscope. In order to meet the requirements of sampling accuracy, the digital oscilloscope sampling frequency is set to 10KHz. Use 1kW electric power as load. The signal waveform is showed in Figure 2.

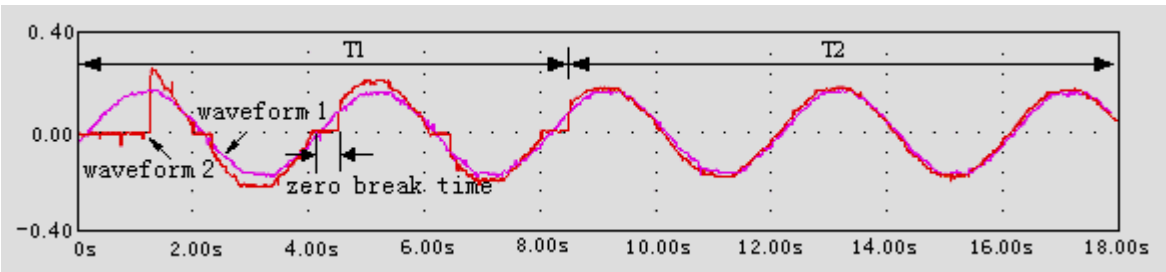

Figure 2. Waveform of arc current and normal current

In Fig.2, T1 is the waveform of arc generation phase, T2 is the waveform of arc recovery phase. For comparison, put together the normal current waveform and fault current waveform. The waveform 1(that is 'signal') is the normal current waveform, the waveform 2 is the arc fault current waveform. 'Signal' gets the isolated mutation points at the sample points of 163,224,326,423,525, etc. and these mutation points is similar to the step signal.

Analyze the arc current waveform from Fig.2, we can know that:

1) After the steady of arc burning, the current waveform is very similar to the normal current waveform, so the virtual value of arc current is very close to the value of normal current, it is the real reason of why the circuit protective equipments can not cut off the arc easily.

2) At the course of T1, there has a particular region at the arc current instantaneous value. At this region, the current value is close to zero. This region is usually regarded as zero break time[19]. The reason of the form of zero break time is: After the arc's continuously burning, when the current is coming to the zero, because the electric intensity can not keep the arc discharging serially, the current between the electrodes approach to the zero rapidly. When the voltage between the two point of electrodes go up gradually, the electric intensity between the electrodes intensify, under the action of afterheat, the air-gap between the electrodes is breakthrough and form arc, the current value increase rapidly and form the abrupt signal.

3) At the course of arc continuously burning, the zero break phenomena periodically appear accompanied by current periodically pass through the zero.

If the signal frequency band normalized in the interval[0，π], then each wavelet decomposition is to divide the signal's frequency band in half. That is [0，π/2] is the low frequency, [π/2，π] is the high frequency. Porous algorithm also inherited such nature. In this system, because the sample frequency is set to 10KHz, then the situation of every time of porous algorithm's band segmentation is showed in Table 1.

TABLE I.

POROUS ALGORITHM'S SINGLE BAND SEGMENTATION

Decomposition number	High frequency range	Low frequency range
The first decomposition	[5KHz , 10KHz]	[0Hz , 5KHz]
The second decomposition	[2.5KHz , 5KHz]	[0 , 2.5KHz]
The third decomposition	[1.25KHz , 2.5KHz]	[0 , 1.25KHz]
The fourth decomposition	[625Hz , 1.25KHz]	[0 , 625Hz]
The fifth decomposition	[312.5Hz , 625Hz]	[0, 321.5Hz]
…	…	…

C. Use Wavelet Approximation Methods to Analyze the Current Signal

Select the orthogonal quadratic spline wavelet to dyadic wavelet transform the current signal. Scales were[1、2、4、8、16、32、64]. The wavelet transform coefficients are showed to Figure 3.

The wavelet approximation's results of wavelet function with scale of 1, 4, 8, 16, 64 is showed in Figure 3:(b), (c), (d), (e), (f). the smaller the scale, the higher the signal's frequency. So Fig.3(a) can be considered to mainly reflect the original signal's noise part. In Fig.3(c), (d), (e), it can clearly distinguish the modulus maxima points. These modulus maxima points are correspond to the original signal's mutation points, and have the following natures:

(1) When the original signal up mutation, wavelet transform coefficients showed the negative modulus maxima; when the original signal down mutation, wavelet transform coefficients showed the positive modulus maxima.

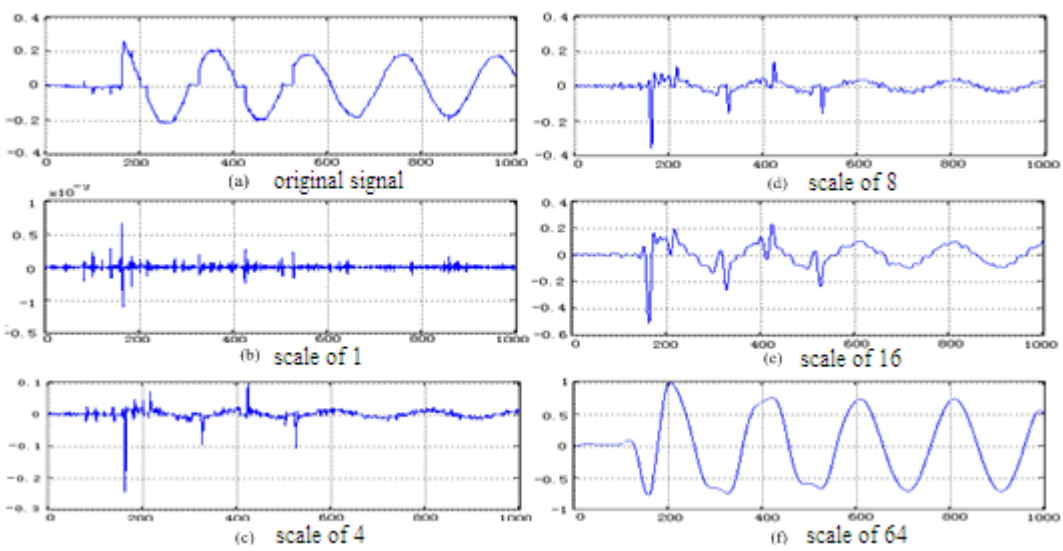

Figure 3. Wavelet coefficients of wavelet approximation

(2) These modulus maxima points showed the cyclical, test showed that the cycle range is 100±15 points.

(3) The amplitude of these modulus maxima points' wavelet transformation increases with the scale, so their singularity degree is lower than step signal, their lipschitz index value should be between 0 and 1.

IV THE ARC FAULT DETECTION SYSTEM'S REALIZATION BY LABWINDOWS/CVI

A. The Basis of The Design of Hardware Circuit

According to the experiment, we discover that when the arc comes into being in the power supply circuit, the zero break phenomenon usually maintain more than 1ms. According to the Nyquist sampling theorem, in order to reflect the single's characteristic correctly, the sample circuit's sample interval must less than the 1/2 zero break time. In order to reflect the course of arc's produce and extinguish, the system's sample frequency is set to 10KHz. Select the Hall current sensor manufactured by the FC Stone as the detection component; the AD976A as A/D translation chip, its conversion accuracy can reach the 16 bits; the AT89S51 single chip as the low computer to compose the arc fault signal's sample circuit.

The arc fault on-line detection system showed in Figure 4. After current signal extracted by current sensor, the sample signal is gained and amplified through preamplifier circuit. Through low-pass filter, the high frequency interference signal is filtered and through A/D translation circuit, the analog sample signal is transformed into the digital signal. Than the digital sample signal is sent to the sample maintain circuit waiting to the AT89S51 signal chip's read. AT89S51 control multiple-way switch, select the signals to the signal chip. Signal is conditioned as the long-range signal and through signal chip serial port sent to upper computer. The transport protocol between the signal chip and upper computer is RS485.

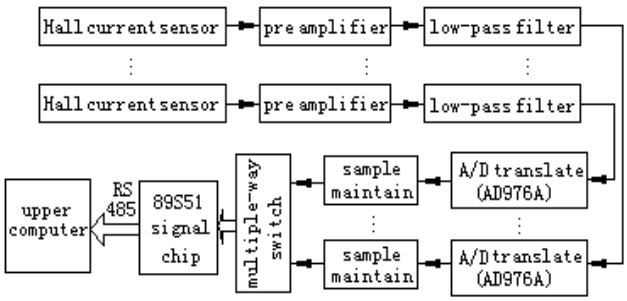

Figure 4. Frame of on-line arc fault detection system

B The Key Techniques of Low Computer Program Design

The low computer program design mainly includes A/D conversion program, serial port transmission procedure and watchdog program, etc. The serial port transmission procedure and watchdog program should be pay more attention.

1) The Key Techniques of Serial Port Data Transmission Procedure: The upper computer is developed by LabWindows/CVI, but the LabWindows/CVI can only read the character data. In order to optimize the upper computer program further, reduce the run time of upper computer's program, increase the upper computer program's readability, the low computer's data is designed as the character data. But there has another problem: use assembly language to realize data type conversion is very difficult, so we use C Language to write the low computer program.

In C Language, suppose 'a' is a signed shaping data, use the command 'b=(char)a' compulsively transform 'a' to character data and use the command 'c=(int)b' return 'b' to shaping data 'a', that is 'c=a'. but the point we must pay attention is: 32 bits PC computer can only realize data conversion from -128~+127, the 8 bits AT89S51 can only realize data conversion from -32~+31, but AD976A's conversion accuracy is 16 bits, its output data range from -32768~+32767, which beyond the data range of the command '(char)a' and '(int)b' in 8 bit signal chip. So when translate the data, split the data which waited to transmit into the 'units', 'decimals', 'hundreds', 'kilobits', 'myriabits'(merge the 'sign bits' into 'myriabits'), and set the 'flag bits' correspondingly. The upper computer recombines these data depend on the situation.

2) The Key Techniques of Watchdog Program[21][22]: In order to avoid the system halt caused by the program's lossing and the endless loop, the watchdog program should be used in system's sample circuit to ensure the system's reliability. the watchdog module is integrated in AT89S51, but the watchdog module must be activated. The program to activate watchdog is:

```
int a6=DBYTE[0xA6]; //define storage unit A6H//
a6=0x1e;            // startup watchdog，first input 1E//
a6=0xe1;            //then input E1//
```

Because AT89S51 only has 14 bit enumerator, the dog should be feed every 16383 cycles, and the time is fixed, can not be changed. If the crystal oscillator frequency is 12M, the dog should be feed every 16 ms. So the watch dog timer should be in the program of data send interrupt program .

C The Upper Computer Labwindows/CVI Program Design[23][24]

The upper computer program---"the on-line arc fault detection system" developed by the monitor and control software of LabWindows/CVI. LabWindows/CVI is a suit of software development platform face to monitor and control area which is launched by the National Instruments Company. The ANSI C is its core, it affords a perfect software development environment for developer to build the detection system, automatic measurement environment, data sample system and process monitor system.

Upper computer system is composed by main interface, on-line detection interface, data analysis interface. The main interface's main task is accomplish the 6 points' detection, display the 6 detection points' working position, once arc fault formed, alarm in time. On-line

detection interface can instantly reflect the detail information of the points' current waveform, current virtual value, fault situation, etc; and can design the detection points' sample precision, software shift, filtering way, filtering frequency, wavelet type, wavelet threshold value, etc. Data analysis interface is to detailed analyze the past signal, and reveal the wavelet function and scale function of data arc detection algorithm.

1) The Use of Multithreading Technology: The multithreading program is the program which has at lest two threads to execute programs at the same time. When user command the operation system to execute a particular program, the operation system build a main thread, in the same time, operation system need to build one or more than one subsidiary threads other than the main threads. Multiple threads can avoid block, decrease the interaction between running course and user interface, make the best use of multiple processor.

The main programs in upper program are serial port data program, data pretreatment program, data analysis program, etc. systems build two subsidiary threads other than main thread. The main thread's task is each interface's display, switch, exit; one of subsidiary thread's task is read serial port data, display the detecting type; the other of subsidiary thread's task is data pretreatment and data analysis.

LabWindows/CVI afford the thread pools and asynchronous timers, we can select the thread pools to build subsidiary threads according to the need. Use the function:

'CmtScheduleThreadPool-Function( )' to build two subsidiary threads;

Before the system exit, use the function:

'CmtWaitForThreadPoolFunctionCompletion()' to compulsive finish, and through the function:

'CmtReleaseThreadPoolFunctionID( )' to release the resource which is occupied by subsidiary threads. Every subsidiary thread would produce a corresponding thread call-back function. The program which works under every thread should write in the corresponding thread call-back function.

2) The Design of Serial Port Data Read Program:

LabWindows/CVI afford serial port function base. Program the serial port, first use the function

'OpenComConfig( )' to open and to initialize the COM1 port, than receive the data, close the COM1 port before the program end.

LabWindows/CVI afford an important serial function:

'InstallComCallback( )', it set a call-back function for the appointed serial port. This call-back function can reflect the different situation of serial port. The system's setting is: when serial port receives each data, it would start up serial port data receiving function. In the receiving function, first compute the length of data which the serial port received, then open a data area of char type with the same size to store data, at last, use function:

'ComRd( )' to read the serial port data.

After the data reading finished, must use function:

'CloseCom( )' to close the serial port.

3) The Design of Data Pretreatment Program: The upper program first recompose the data which is carried by AT89S51 and revert the real values based on A/D conversion precision, eliminate the noisy signal according to the need.

① *Data Recompose:* The system set a sign character 'flag' to note the number of received data. Through judge the value of 'flag', make sure the data belongs to which bits, the 'units', 'decimals', 'hundreds', 'kilobits' or 'myriabits'. For the more, system store a data file every 2000 sample data points, so every time the 'flag=1999', the data file store once, and 'flag=0', to recalculate.

② *Data Revert:* According to the output scope of AD976 and the input scope of current sensor, the formulation of data reverts is:

$$signal[i] = ontimesignal[i] \cdot 40.0 / 65535.0 \quad (1)$$

$ontimesignal[i]$ --- the result of data recompose

$signal[i]$ --- the real signal after revert

③ *Elimination of Noisy:* In order to eliminate the possible noise at the course of data transmission, can use software to filter the received data based on the need. LabWindows/CVI affords a variety of filters, such as Butterworth filter, chebyshev filter, etc. Butterworth filter is selected as the software filter. 'Bw_LPF()' is the low-pass Butterworth filter, 'Bw_HPF()' is the high-pass Butterworth filter. Set a numerical control 'Numeric1' at the user interface, user can change the filter frequency through change the Numeric1's value.

4) The Design of Arc Fault Detection Algorithm Program: When AC arc continuously burning, the phenomena of periodical zero break is reflected as the periodical singular point in the signal. So the essence of arc fault detection is to detect the periodical singular point of the current signal.

System transform the collected current data based on binary wavelet group by group, select the orthogonal quadratic spline wavelet as wavelet function, select cellular algorithm as wavelet transformation. Based on the quality of the signal singular point's dimension transmit, each group need three times' wavelet transform. Analyze each wavelet transform's high-frequency signal, find model's maximum value. If in the high-frequency signal of the three times' wavelet transform, the model's maximum value located within the limit area, we regard that this model's maximum value is the signal's singular point. In the experiments, if the sample frequency is 10KHz, the arc burn constantly and the space of the two singular points is 100 ± 15, at the same time the arc's burning time is the half of power frequency periods, that is 0.01s. If the signal's singular points display the periodic distribution, we regard the arc fault in the power supply circuit comes into being.

When we program the signal's wavelet transform, set a parameter i to compute the number of convolute of signal and filters. If $i \le 3$, then go next, if $i > 3$, then output the last high frequency coefficient of wavelet transform. The wavelet transform's flow chart showed in Figure 5. Use the wavelet cellular algorithm to realize the wavelet transform in LabWindows/CVI, benefitted from

the convolution function which afforded by LabWindows/CVI:

'Conolve(double x[],int n,double y[], int m, double cxy[])'

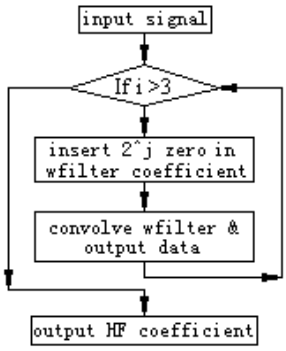

Figure 5. Flowchart of wavelet transformation

Based on the above methods, we designed the algorithm of arc fault's detection, fused it into the on-line arc fault detection system and realized the on-line arc fault detection. The working image of on-line detection interface of arc fault on-line detection system showed in Figure 6.

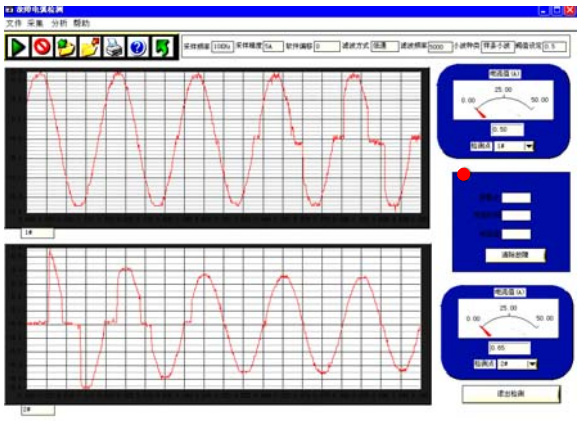

Figure 6. On-line arc fault detection

V CONCLUSION

When the arc fault formed in the circuit, there has the periodical zero break phenomenon in current, the phenomenon is represented as periodical singularity point in signal processing, so the periodical singularity point's detection algorithm is proposed. This algorithm use the wavelet transform's singularity detection to judge whether there has the periodical singularity point or not in the current, then to judge if the arc fault comes into being or not.

First according to the select principle of wavelet singularity detection, select and construct orthogonal quadratic spline wavelet as wavelet function, and use the porous algorithm dyadic wavelet transform to realize wavelet transform fast algorithm. Then carried out the arc fault's wavelet singularity detection through modulus maxima detection method, finally analyzed the current signal by the method of wavelet approximation. LabWindows/CVI is used as development platform to design and implement the above analysis. Based on LabWindows/CVI, the upper computer program uses multithreading technology to detect and analyze the current signal. By arc fault detection algorithm, the system judges whether there has arc fault or not. The algorithm judges whether there has arc fault or not through detect if there has periodicity singularity points or not. The experiments show that this detection method of arc fault can detect arc fault in power supply circuits exactly and efficaciously.

ACKNOWLEDGMENT

I wish to thank my colleagues Hui Lv, who helped me search for reference, and thank for the references' help of this article. This work was supported in part by a grant from the Ph.D. Programs Foundation of Ministry of Education of China(No. 2006021600) and the Key Scientific and Technological Project of Henan Province(No. 0624460012).

REFERENCES

[1] Jing Guoxun, Wang Weimin, Hao tianxuan. "Fire Accident Forecast Based on Gray-back Propagation Networks", *Industrial Safety and Environmental Protection*, Feb.2008.Vol.34.No.2, pp. 61-63.

[2] Di Man, et al. "Research on the electrical fire and the prevention strategy", *Fire Science and Technology,* Jan.2008.Vol.27.No.1, pp. 5-9.

[3] Wang Qiping, *Electric Appliance Arc Theory,* China Machine Press, Beijing.China, 1991.

[4] O.B. BpoH, *Electric Arc in Control apparatus*, China Industry Press, Beijing.China, 1965.

[5] Rafferty J.M, *Vacuum Arcs Theory and Application*, China Machine Press, Beijing.China, 1985.

[6] Huaren Wu, Xiaohui Li, Stade D, Schau H. "Arc fault model for low-voltage AC systems", *IEEE Transactions On Power Delivery,* 2005.20(2), pp.1204-1205.

[7] S. Arunachalam, B. Diong. "A Parametric Model Approach to Arc Fault Detection for DC and AC Power Systems", *Industry Applications Conference*, 2006.5, pp.2249-2255.

[8] Idarraga Ospina G, Cubillos D, Ibanez L. "Analysis of arcing fault models", *Transmission and Distribution Conference and Exposition,* 2008.8, pp1-5.

[9] Spyker R, Schweickart D.L, Horwath J.C, etal. "An evaluation of diagnostic techniques relevant to arcing fault current interrupters for direct current power systems in future air cuaft", *Electrical Insulation Conference and Electrical Manufacturing Expo*, 2005.10, pp146-150.

[10] Restrepo C.E. "Arc Fault Detection and Discrimination on Methods", *Electrical contacts-2007, the 53rd IEEE holm conference*, 2007.9, pp115-122.

[11] Chul-Hwan Kim, Hyun Kim, Young-Hun Ko etal. "A Novel Fault-Detection Technique of High-impedance Arcing Faults in Transmission Lines Using the Wavelet Transform", IEEE Transaction on Power Delivery, 2002:17(4), pp921-929.

[12] George D. Gregory, Gary W. Scott. "Arc-fault circuit interrupter: an emerging product" , *IEEE Transaction on Industry Applications*, Sep-Oct.1998.Vol.34.No.5, pp. 928-933.

[13] George D. Gregory, Kon Wong, Robert F. Dvorak. "More about Arc-fault Circuit Interrupters", *IEEE Transactions on Industry Applications*, Jul-Aug.2004.Vol.40.No.4, pp. 1006-1011

[14] G. Parise, L. Martirano, R.E. Nabours, "Arc-fault protection of branch circuits, cords and connected equipment", *2003 IEEE Industrial and Commercial Power Systems Technical Conference*, May 4-8.2003, pp. 85-88.

[15] D.A. Lee, A.M. Trotta, Jr. King W.H. "New Technology for Preventing Residential Electrical Fires: Arc-Fault Circuit Interrupters (AFCIs)", *Fire Technology,* 2000.Vol.36.No.3, pp. 146-162.

[16] Qi Biru, Xiao xiangning, "Modeling and Simulation of an Arc Furnace for Voltage Fluctuation Investigation", *Transactions of China Electrotechnical Society,* Jun.2006.Vol.15.No.3, pp. 31-35.

[17] Wang An, Zhou Huigao, Qi Zhongyi, "Digitized Measuring System of Arc Voltage For High Voltage Circuit Breaker", *High Voltage Apparatus,* Feb.2001.Vol.37.No.1, pp. 35-37.

[18] Cao Meiqing, Zou Zengda, Du Baoshuai, etal. "Electric Arc Shape of Twin-wire Indirect Arc Welding", *Transactions of the China Welding Institution,* Dec.2006.Vol.27.No.12, pp. 49-53.

[19] Yin Tongqing, Chen Hongliang, "An Arc-Fault Detection Based on Wavelet Transformation." *Research and Exploration in Laboratory*, vol.27.No.3, 2008.3,pp 19-21.

[20] Sun Tingkui, *Wavelet Analysis and Its Applications*, China Machine Press, 2005.

[21] Li Hongsheng, Zhu Xinhua, Xu Xianghua, etal. "16-bit A/D Converter AD976A and Its Application" . Chinese Journal of Scientific Instrument, Aug.2003.Vol.24.No.4, pp. 274-277

[22] Sun Hepin, Yang Ning, Bai Jing, Single Chip Theory and Interface Technology . Metallurgical Industry Press, Beijing.China, 2003.

[23] Sun Yigang, Qiao Liyan. *Program Manual of Virtual Instrument Software Development Environment Lab Windows/CVI6.0,* China Machine Press, Beijing.China, 2002.

[24] Sun Yiaoyun, Guo Liwei, Sun Huiqin. *Design and Application of Virtual Instrument Based on Lab Windows/CVI6.0,* Electronics Industry Press, Beijing.China, 2005.

Qiongfang Yu Jiaozuo, Henan Province, China. Birthdate:January,1978. Graduated from Henan Polytechnic University of Control Theory and Control Engineering, obtained a master's degree (three years) in 2004, At present, is doctoral student in Measurement Technology and Instrumentation Key Lab of Hebei Province, Yanshan University. And research interests on measurement and control technology and instrumentation.

She is a lecturer of School of Electrical Engineering and Automation, Henan Polytechnic University. The presenter of Detection Technology and Automation Instrumentation course, and engaged in a number of provincial and ministerial level scientific research projects. Among them, "Large stores electrical fire detection and quickly and accurately alarm system ." has passed the appraisal, the identification results is "The leading domestic (China)". "Mine integrated coal mouth coal gangue put coal face recognition technology research" and "Power line fault detection and location of technology research" are in the reasearch projects , and so on. Published more than ten scientific articles, which six papers indexed by Ei. Published two textbooks, which one gained power industry quality materials.

[1]Yu Qiongfang, Zheng Dezhong, Fu Yongli, etc. "Intelligent fire alarm system based on fuzzy neural network", *2009 International Workshop on Intelligent Systems and Applications, ISA 2009*, vol.2.

[2] Dong Aihua, Yu Qiongfang. "The summary of low-voltage power distribution switch fault arc detection and protection technology". *the 2011 International Conference on Electric and Electronics, EEIC 2011,* Lecture Notes in Electrical Engineering, v 97 LNEE, n VOL. 1, pp 711-718.

[3] Dong Aihua, LiLiang, YuQiongfang, etc. *Detection and conversion technology.* China Electric Power Press. Beijing,China, 2007.12

Dezhong Zheng Qing Huangdao, Hebei Province, China. Birthdate: January,1949. professor of Institute of Electrical Engineering, Yanshan University. Associate editor of Chinese Journal of Sensors and Actuators. Research interests on system simulation, signal detection and processing.

Yi Yang Henan Province, China. Birthdate:1980. is Control Theory and Control Engineering Master's degree. graduated from School of Electrical Engineering and Automation, Henan Polytechnic University. And research interests on signal detection and processing and control system simulation.

He is a lecturer of School of Electrical Engineering and Automation, Henan Polytechnic University.

Aihua Dong Henan Province, China. Birthdate:1955. is professor of School of Electrical Engineering and Automation, Henan Polytechnic University. Research interests on signal detection and processing and control system simulation.