Characteristics of Linear Induction Motor Considering Material of Reaction Plate Change

Meng Li
School of Electrical Engineering, Beijing Jiaotong University, Beijing, China
Email: lemonlmlm@126.com

Zhongping Yang, Fei Lin and Hu Sun
School of Electrical Engineering, Beijing Jiaotong University, Beijing, China
Email: {zhpyang, flin, hsun1}@bjtu.edu.cn

***Abstract*—In this paper, a method of calculating the parameters of equivalent circuit model of linear induction motor(LIM) is proposed based on numerical analysis and finite element method(FEM). The method is proved accurately through the traditional removed and locked tests. Material change of reaction plate's effect on how equivalent circuit's parameters change and the influence on thrust and vertical force are analyzed through this method. The co-simulation of Maxwell and SIMULINK is analyzed. A control algorithm to compensate the effect of material change is presented. The compensation is based on equivalent circuit parameters variation and indirect vector control. Simulation results have shown the algorithm had good performances.**

***Index Terms*—linear induction motor, equivalent circuit parameters, finite element method, vector control, material of reaction plate**

I. Introduction

Linear induction motor has been applied in urban transportation system widely, mainly because of its low cost construction of lines, and stations using small cross-section and improved ability of negotiation with sharper curves and steeper gradient. However, LIMs have an extremely obvious disadvantage with end effect and large air gap, which turns out to be very low power factor and efficiency. Many research have been done concentrated in reducing the influence of end effect and improving LIM's efficiency[1]-[3].This included optimize the motor parameters for optimal efficiency using motor design method[1], adopt control algorithm to reduce the influence of end effect[2] and change the structure and material of reaction plate(RP)[3]. It helps to improve acceleration characteristics and efficiency when change the material of reaction plate. This was first proposed by Hitachi Japan and was applied in Tokyo metro line 12 and Osaka line 7[4].

The RP of LIM is made up by a conductive plate which usually built up with high conductivity copper or aluminum (correspond to squirrel cage of a squirrel cage induction motor) and high relative permeability back iron. Modification of the structure or material of RP has influence on motor characteristics. For instance, Bombardier used laminated back iron instead of the integral back iron, which could improve the acceleration and deceleration performance of the vehicle and increase efficiency by reducing the core-loss. While Hitachi Co. used higher conductivity copper instead of aluminum as conductive plate, in order to reduce the copper loss and improve efficiency[5]. The structure of these two methods is shown in Fig.1.

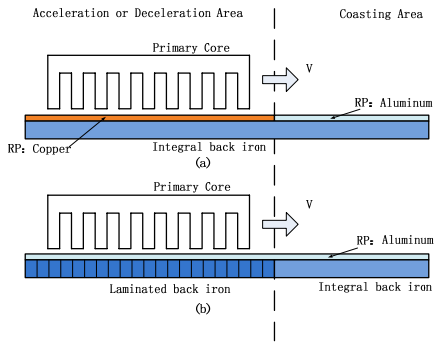

Figure 1. The reaction plate of linear metro: (a)The RP of Tokyo Line 12 and Osaka Line 8: change the material of RP; (b)The RP of MK Bombardier: change the structure of back iron

The data in [1]indicates that the efficiency increases from 76.2% to 78.9% when using copper instead of aluminum without other motor parameters change. While [4] proves copper could increase maximum thrust, thereby improving the vehicle's acceleration and deceleration performance to save energy. However, [3]analyzes that eddy current caused by end effect is bigger using higher conductivity copper, which brings more additional loss, so it's doubtful to use copper replacing aluminum.

Recently, many researches still aim to analyzing the characteristics of LIM accurately, especially when parameters of LIM are changing during operation. Ref. [6]and[7] adopt Finite Element Method(FEM) to calculate the electromagnetic forces and equivalent

Manuscript received July 1, 2012; revised Aug.20, 2012;
Corresponding author: Fei Lin (flin@bjtu.edu.cn)

doi:10.4304/jcp.8.1.102-107

circuit parameters of Double-Sided Linear Induction Motor(DLIM) and Long Primary Double-Sided Linear Induction Motor(LP-DLIM), respectively. Simulation results have shown FEM was a good method, but little test results exited. Ref.[8] proposed an improved LIM equivalent circuit model, which takes longitudinal end effects, transversal edge effects and half-filled slots into consideration. It was feasible for high speed LIM, while seems a little complex and redundant for low speed applications. FEM is a good method to calculate the characteristics of LIM but seems useless in motor control area. Some intelligent control algorithms were proposed to optimize the trust of LIM, but they ignored parameters variation, especially in some special situations like secondary changing from copper to aluminum, etc. [9]. While [10] gives us a fresh idea that combined parameters variation and control method together.

When aluminum is substituted by copper, what're the real effects and what characteristics have been changed was discussed little in these papers.

In this paper a method was proposed to calculate the equivalent circuit parameters through FEM. The differences of these parameters and control performances are discussed when primary moves from copper to aluminum. A compensation algorithm is proposed based on indirect vector control to optimize propulsion-force.

II. EFFECTS OF MATERIAL CHANGE OF RP

If the material change is explained simply as the secondary resistance variation, it can be described as follow. Assume that LIM's primary length is l, the relationship between secondary resistance R_r and primary position x can be shown as in Fig.2. R_r differs when primary moves in three different area: all above copper area, all above aluminum area and part above copper part above aluminum. The relationship between secondary resistance and primary position is described as (1).

$$R_r = \begin{cases} R_{cu} & x < 0 \\ x \cdot R_{cu} + (l - x) R_{alu} & 0 \le x < l \\ R_{alu} & x \ge l \end{cases} \tag{1}$$

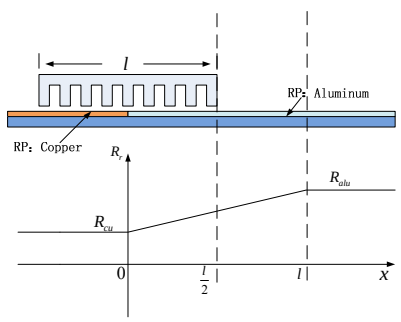

Figure 2. The rotor resistance change vs. primary position x

Where R_{cu} and R_{alu} correspond to secondary resistance when primary is all above copper and aluminum, respectively. While $0 < x < l$ secondary resistance vs. primary position is linear, this can be explained by (2)[11].

$$R_r = \frac{6 W_{ce} k_w^2 N_1^2 \rho_r}{P d \tau} \tag{2}$$

Here, W_{ce}, k_w, N_1, ρ_r, P, d ,and τ correspond to primary core width, primary winding coefficient, conductors per phase per pole, secondary resistivity, pole pairs and thickness of RP. Equation (2) shows that while other parameters are constant, R_r is proportional to secondary resistivity ρ_r.

The orientation problem of indirect vector control comes out while the secondary resistance varies. Besides, other problems such as thrust and vertical force, secondary leakage inductance and excitation inductance variation appear when the RP material changing.

III. ELECTROMAGNETIC SIMULATIONS USING MAXWELL

A. The FEM Model of a LIM

The FEM model shown in Fig.3 is based on a real LIM.

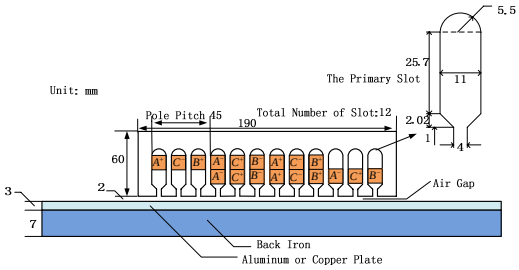

Figure 3. FEM model based on a real LIM

The simulation environment is Ansoft Maxwell 14. Other design values and conditions for FEM are summarized in Table 1. And the real LIM prototype is shown in Fig.4.

TABLE I.

MAIN PARAMETERS OF THE ANALYSIS MODEL OF LIM

Conditions(Units)	Values
Rated voltage(V)	380
Rated frequency(Hz)	50
Turns of coil	110
Synchronous speed(m/s)	4.5
Material of primary core	DW310
Conductivity of sec.-alum.(S/m)	3.8×10^7
Conductivity of sec.-copper(S/m)	5.8×10^7

B. General Equivalent Circuit of LIM

Generally, the equivalent circuit of LIM is similar with traditional rotating induction motor(RIM). A big difference appears when end effect is taking into consideration. A good way to consider end effect is add

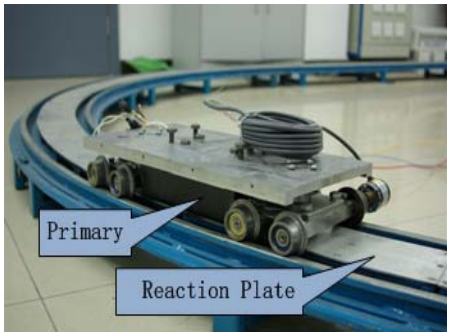

Figure 4. The prototype of LIM

The flux line distribution is shown in Fig.5.

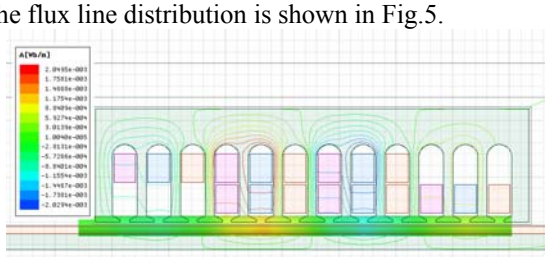

Figure 5. Flux line distribution of LIM

an end effect factor $f(Q)$ in excitation branch circuit, which differs from LIM speed, as shown in Fig.6(a)[2]. The end effect could be ignored when speed is quite low, which is true for the LIM in our laboratory. The equivalent circuit is proposed as shown in Fig.6(b). Here $R_s(x)$, $L_s(x)$, $L_m(x)$, $L_r(x)$ and $R_r(x)$ are parameters depend on primary position. Because the position of copper RP and aluminum RP is fixed, it links the relationship between these parameters and the material of RP. Attention that the core loss resistance R_m of LIM in this article is quite small compared with R_s and R_r, so it's been ignored.

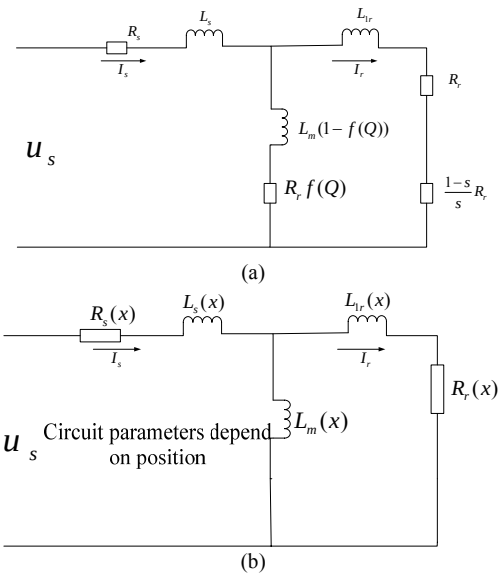

Figure 6. Equivalent circuit of LIM: (a)with end effect; (b)without end effect but with material change effect.

C. Identification of Circuit Parameters

The general identification of circuit parameters is based on no-load and locked-rotor test. Two problems appear when taking this method for LIM. One is the primary always has a load when it's on the rail, so ideal no-load test is difficult to achieve. Another is primary leakage inductance and secondary leakage inductance are not equal because of LIM's special structure, while for RIM they're looked as equal. Many methods come out to solve this problem, among them using FEM with electromagnetic simulation is an effectively one. FEM is simply to achieve, economical and ideal no-load simulation can be done[12].

The locked-rotor test is easy to experiment, so we do the test using a real LIM and simulate it using FEM based on its real model. Current, active power and power factor are tested when changing supply voltage, both for simulation and experiment. Comparing the simulation and experiment results, if they're close with each other, the FEM model is proved accurately. The results are shown in Fig.7.

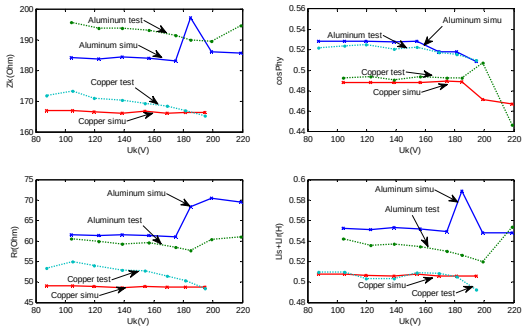

Figure 7. Characteristics of circuit parameters with RP locked-rotor test and FEM.

The simulation and experimental results are close with each other within the error of 10%. The results show that when primary moves from copper to aluminum, the locked-rotor impedance Z_k, rotor resistance R_r and leakage inductance $L_{ls}+L_{lr}$ are all increase, while power factor $\cos\varphi$ decreases. That means the efficiency using copper is higher than aluminum. Note that the results in Fig.5 are calculated when the whole primary is above copper or aluminum. The primary resistance R_s is tested through bridge method. It's possible to use this FEM model to simulate the no-load situation, and primary leakage inductance L_{ls} and excitation inductance L_m are calculated[12].

D. Effects of Material Change on Circuit Parameters

As discussed before, when change primary position x, the equivalent circuit parameters can be calculated using FEM in Fig.8. When primary is all above copper and aluminum, 3 points are calculated, respectively. And 3 points are calculated when $x=1/4l, x=1/2l, x=3/4l$ in Fig.2. The characteristics of circuit parameters depending on primary position are shown in Figure8.

R_s

In Fig.8, primary resistance is influenced by primary winding only, so it keeps constant. Excitation inductance L_m has little relevant with primary position. Among no-load simulation, end effect is ignored so calculation of L_m is not so accurate. Secondary resistance R_r and leakage inductance L_{lr} correlate directly with primary position. When primary moving from copper to aluminum area, R_r and L_{lr} increase from49.2, 0.114H to 62.1, 0.123H, with increasing rate of 20.8% and 7.3% , respectively. When primary position increases from $x=0, x=1/4l, x=1/2l$ to $x=3/4l$, $x=l$ R_r and L_{lr} corres pond to increasing linearly, which is consistent with Eq.1. Attention that primary length of LIM calculated in this paper is only $190mm$. For real LIM on metro length is more than $2m$ and the process maybe different.

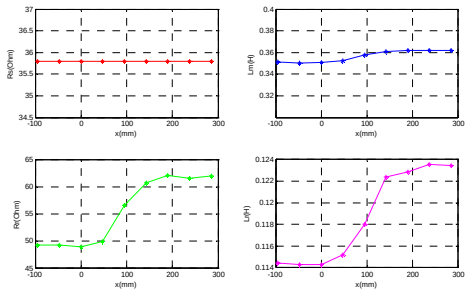

Figure. 8 Charateristics of circuit parameters depending on primary position

F. Effects of Material Change on Thrust and Vertical Force

Thrust of LIM can be looked as the relative force between air gap flux and secondary eddy current, while vertical force is made up by attractive and repulsive force. The attractive one is proportional to magnetic energy in air gap and the repulsive one is partially according to force between primary and secondary current[13]. Thrust and vertical force are two main parameters of a LIM, but they're not easy to be analyzed. Ref. [14]gives us a general method to calculate them, which proves that before we calculate the force, we have to know the flux density in the air gap.

Maxwell's Equation makes it possible, but it's complicated. It's the computer and finite element method makes it easier and accessible. Fig 9 shows the thrust and vertical force when speed of LIM is 1.0, 2.0, 3.0 and 4.0 m/s simulated by FEM, respectively. The change point is the time when RP is from copper to aluminum.

When calculated for several times, we can draw the Torque-s curve like in rotary induction motor, as shown in Fig. 10.

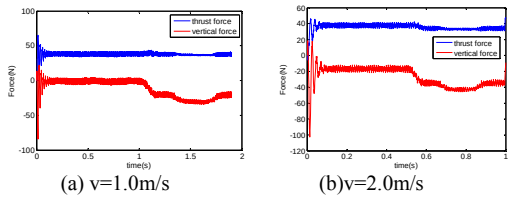

(a) v=1.0m/s (b)v=2.0m/s

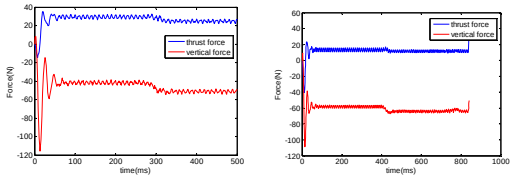

(c)v=3.0m/s (d)v=4.0m/s

Figure 9. Thrust and vertical force under different speed

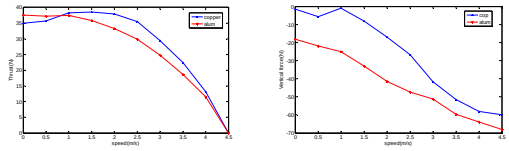

(a)Thrust (b)Vertical force

Figure 10. Thrust and vertical force vs. slip frequency(synchronous speed is 4.5m/s)

IV . Vector Control of LIM Considering Material Change of RP

A. Co-Simulation of Maxwell and Matlab/Simulink

Maxwell has played a very considerable role in electromagnetic simulation, while in electrical machine control area it's little helpful. MATLAB is the first choice in simulation of motor control. However, the equivalent circuit parameters calculated by FEM can be used in the control module, which combine Maxwell with SIMULINK well, as shown in Fig. 11.

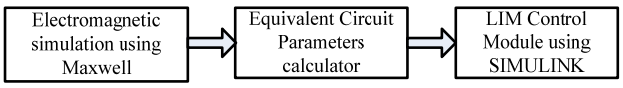

Figure 11. Co-Simulation of Maxwell and MATLAB/SIMULINK

B. General Vector Control Scheme for LIM

The vector control for LIM can be analyzed in the same way that the traditional induction motor. One problem in the LIM case is that a new resistance and inductance, speed dependents, are included in the magnetization branch. The estimation of propulsion-force and rotor flux become different, as shown in (3) and (4)[2].

$$F_e = \frac{3\pi}{2\tau}\frac{n_p}{2}\frac{L_m[1-f(Q)]}{L_r - L_m f(Q)}\psi_{dr} i_{qs} \tag{3}$$

$$\psi_{dr} = \frac{[L_m - L_r f(Q)]R_r}{[L_r - L_m f(Q)]P + R_r[1+f(Q)]} i_{ds} \tag{4}$$

General block diagram of vector control for LIM considering end effect but not considering material change of RP effect is shown in Fig.12.

C. Compensation for Vector Control Considering Material Change of RP

The vehicle's position x is known online in a subway system. According to the relationship in Fig.8, we can estimate circuit parameters online. In Fig.12, slip frequency ω_{sl} is calculated by following formula.

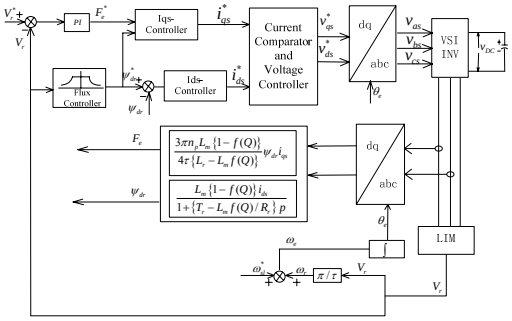

Figure 12. Block diagram of the vector control for LIM

$$\omega_{sl}^{*} = K_s \cdot i_{qs}^{*} \tag{5}$$

$$K_s = \frac{L_m(x) \cdot R_r(x)}{L_r(x) \cdot \psi_{dr}} \tag{6}$$

Parameters in (6) are calculated from Fig.8. Then compensation algorithm is proposed depending on primary position and material change. The estimation of slip frequency is shown in Fig.13.

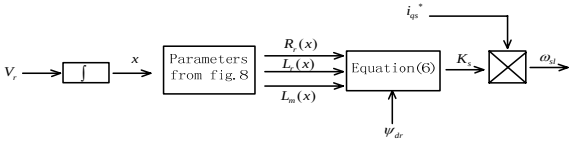

Figure 13. Block diagram of the estimation of slip frequency

V. SIMULATION RESULTS

A Matlab/Simulink simulation model is built based on Fig.4 and Fig.12. The model consists of the electromechanical relationship of a LIM and indirect vector control block. The simulation results without considering material change's effect is shown in Fig.14(a)(b) and results adopt compensation algorithm of Fig.13 is shown in Fig.14(c)(d). The simulation time is 2.5s and load force is 25N. LIM moves from copper to aluminum at 1.0s, when primary position x is setting to zero. The given speed is 0.9m/s and increase to 1.2m/s at 2.0s.

In Fig. 14(a)(b), when LIM moves above copper, $i_q = 0.77A$ and primary current $i_{abc} = 1.28A$. While moving to aluminum, the estimation of slip frequency mismatches because of the parameters changing. i_q and i_{abc} increase to $1.79A$ and $1.58A$, respectively, according to the speed regulator to keep propulsion-force constant.

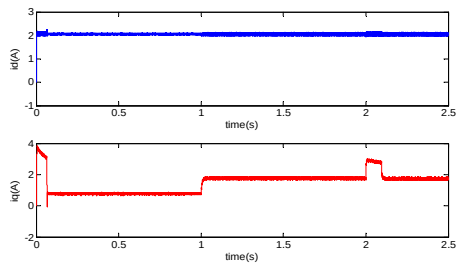

(a)

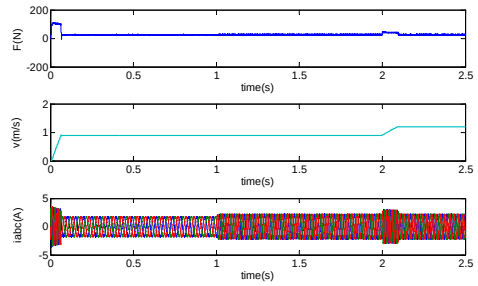

(b)

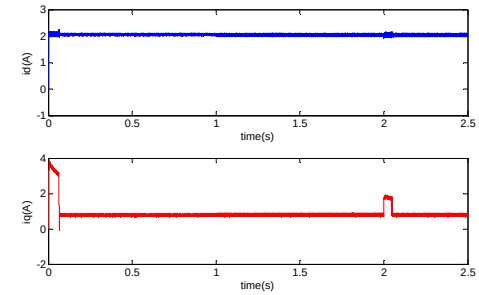

(c)

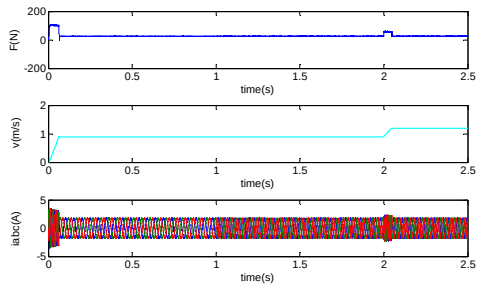

(d)

Figure. 14 Simulation results: (a)(b)without considering material change's effect. (c)(d)with compensation algorithm considering material change's effect.

While taken the proposed compensation algorithm, circuit parameters are corrected online based on primary position. Force current i_q and primary current i_{abc} keep constant, and propulsion-force is the same of (b). The acceleration time decreases from 0.098s to 0.049s. That means after compensated, smaller current can produce same propulsion-force and improve acceleration characteristics.

VI. CONCLUSION

A identification of circuit parameters based on FEM is proposed. Calculation results proved accurately through locked-rotor test. The characteristics of circuit parameters depending on primary position and material change of RP has been analyzed. Results have shown secondary resistance R_r and leakage inductance L_{lr} increases when RP changed from copper to aluminum, while excitation inductance L_m and primary resistance R_s changes little.

Thrust and vertical force of LIM were calculated through FEM, when RP of LIM is copper and aluminum, respectively. Results have shown thrust is larger using copper as RP.

Maxwell and SIMULINK is combined together to research the control characteristics. A compensation algorithm based on parameters change and indirect vector control is proposed to eliminate material change's effect. Estimation of slip frequency is based on circuit parameters which change from primary position. SIMULINK Simulation results show current decreases 19% comparing that without compensation. Acceleration characteristic is improved and propulsion force is optimized through this method.

ACKNOWLEDGMENT

This work was supported by a grant from the Major State Basic Research Development Program of China (973 Program:2011CB711100) and National Key Technology R&D Program(2009BAG12A05).

REFERENCE

[1] S. Nonaka and T. Higuchi, "Design of Single-Sided Linear Induction Motors for Urban Transit", *IEEE Transactions on Vehicular Technology*, vol. 37(1988), No.3, pp.167-173.
[2] G. Kang and K. Nam, "Field-oriented control scheme for linear induction motor with the end effect", *IEE Pro-Electric Power Appl*. vol. 152(2005), No.6, pp.1565-1572.
[3] K. Zhu, Y.M. Wang and J.F. Fan, "Influence of Reaction Plate's Material and Configuration on the Performance of LIM Urban Transit Vehicle", *Urban Mass Transit*, vol. 10(2007), No.9, pp.55-57.
[4] Y.K. Morihisa and T. Masuda, "The Linear Metro R&D of Tokyo Toei Line 12." *The 4th Sino-Japanese Technical Exchanges on Linear Metro, China,* vol.1, pp.154-161, November 2007.
[5] Isobe, Eisuke, "Linear Metro Transport Systems for the 21st Century". *Hitachi Review*, vol. 48(1999), No.3, pp. 144-148.
[6] M. S. Manna, S. Marwaha, A. Marwaha, N. Garg and S. Singh, "Computations of Electromagnetic Force and Fields in Double Sided Linear Induction Motor Using Finite Element Method". *Proc. of Int. Conf. on Advances in Recent Technologies in Communication and Computing, India*, pp. 96-100, November 2011.
[7] T. Yang, L.B. Zhou and L.R. Li, "Influence of Design Parameters on End Effect in Long Primary Double-Sided Linear Induction Motor", *IEEE Transactions On Plasma Science*, vol.39(2011), No.1, pp.192-197.
[8] D. Hall, J. Kapinski, M. Krefta and O. Christianson, "Transient electromechanical modeling for short secondary linear induction machines", *IEEE Transactions on Energy Conversion*, vol. 23(2008), No.3, pp.789-795.
[9] T. Morizane, K. Tsujikawa and N. Kimura, "Control of Traction and Levitation of Linear Induction Motor Driven by Power Source With Frequency Component Synchronous with the Motor Speed". *IEEE Transactions on Magnetics*, vol. 47(2011), No.10, pp.4302-4305.
[10] Y. Nozaki and T. Koseki, "Identification of Plant Model of Linear Induction Motors for a Traction System Intended for Use in a High-Performance Controller", *Electrical Engineering in Japan*, vol. 179(2012), No.2, pp.44-54.
[11] S.A. Nasar and I. Boldea, *Linear Motion Electric Machines*. A Wiley-Interscience Publication, America 1976, pp.121.
[12] D. Dolinar, G. Stumberger and B. Grcar, "Calculation of the linear induction motor model parameters using finite elements". *IEEE Transactions on Magnetics*, vol. 34(1998), No. 5, pp.3640.
[13] I. Takahashi, Y. Ide, "Decoupling Control of thrust and attractive force of a LIM using a space vector control inverter", *IEEE Transactions on Industry Applications*, vol. 29(1993), No.1, pp.161-167.
[14] Sakae Yamamura, *Theory of Linear Induction Motors*, University of Tokyo Press, 1972.

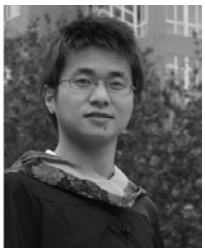

Meng Li was born in Hunan Province, China in 1989. He received the B.S. in Electrical Engineering from Beijing Jiaotong University in 2011.

He is currently studying for a master's degree in School of Electrical Engineering, Beijing Jiaotong University. His research interests are in power electronics and motor drive.

Zhongping Yang received his Ph.D. degree in Electrical Engineering from University of Tokyo, Japan in March 2002. From 2002 to 2004, he worked in Japan Railway Vehicle Technologies of Toshiba Co.

He is currently a professor of Electrical Engineering in Beijing Jiaotong University, China. His major research interests are in the areas of high-speed railway and metro systems.

Fei Lin was born in Shandong Province, China in 1975. He received his B.S., M.S and Ph.D in Electrical Engineering from Xi'an Jiaotong University, Shandong University and Tsinghua University, in 1997, 2000, 2004, respectively.

Since 2004, he was been with School of Electrical Engineering, Beijing Jiaotong University, China. His research interests are in the areas of power electronics and motor control.

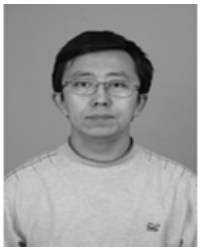

Hu Sun received his M.S. from North China Electric Power University in 2005.

He is currently a senior engineer at Beijing Jiaotong University. His research interests are in the areas of high power converters and control.