Measurement of Reactive Power in Three-Phase Electric Power Systems by Use of Walsh Functions

Adalet Abiyev, Member, IEEE
Girne American University/Department of Electrical and Electronics Engineering, TRNC, Turkey
Email: aabiyev@gau.edu.tr

***Abstract*—This paper presents a new method for measuring of three-phase reactive power (RP) in three-phase systems. Extraction of three-phase reactive power RP from entire instantaneous power signal is achieved by multiplication the phase instantaneous powers with the Walsh function(WF). This method simplifies the multiplication procedure required for the evaluation the tree-phase reactive power components due to the use of the peculiar properties of the WF. In contrast to the existing methods involving phase shift operation between the input voltage and current signals proposed measurement approach does not require the phase shift of the phase current signals to the $\pi/2$ with respect to the voltage signals. Limitations and proposals for future performance enhancements of the suggested method are also discussed. Validity and effectiveness of the suggested method have been tested by use of a simulation tools developed on the base of "Matlab 6.5". The results obtained demonstrate that the computational demands can be substantially reduced by using the proposed method.**

***Index Terms*—reactive power, measurement, unbalanced three-phase systems, analog signal processing, DSP, instantaneous power signal, Walsh function, phase shift.**

I. Introduction

Strong demands to the electrical energy savings in the three-phase transmission and distributions systems require the efficient methods and instrumentations for accurate evaluation of RP drawn by the industrial loads. The RP influences directly to the power factor and as a result overloads the transmission lines between the electrical energy sources and energy users and plays a vital role in the stable operation of power systems [1]. The fundamental positive-sequence reactive power is of utmost importance in power systems because it governs the fundamental voltage magnitude and its distribution along the feeders, and affects electromechanical stability as well as the energy loss [2].

Electric power distribution systems are characterized by unbalanced operation and these characteristics impose serious challenges for the development of efficient computational power flow techniques [3]. When system is unbalance the three current phasors do not have equal magnitudes, nor are they shifted exactly with respect to each other [2]. Load unbalance leads to asymmetrical currents that in turn can cause voltage asymmetry. There are situations when the three voltage phasors are not symmetrical. This leads to asymmetrical currents even when the load is perfectly balanced [2]. Moreover, in unbalanced power systems the RP may be caused by the unbalances [4] and the RP can be inductive or capacitive, and so can be added or can compensate the traditional reactive power due to the reactances. When there are unbalances at sources and at loads in the same time, the RP can have values different from zero even in resistive systems, and generally when there is not any symmetry in the system [4].

Analysis of the known scientific research works confirmed that the various methods have been developed for three-phase RP measurement in both the sinusoidal and noise(in presence of harmonic distortion) conditions. Most of the known research works are based on the method of averaging the value of the product of the current samples and the voltage samples with shifting to the quarter one of the samples (current or voltage) relatively to another.

Reference [5] demonstrates an extension of the wavelet transform to the measurement of RP component through the use of a broad-band quadrature phase-shift networks. This wavelet-based power metering system requires the phase shift of the input voltage signal. In [6] the application of new frequency insensitive quadrature phase shifting method for reactive power measurements has been verified by using a time-division multiplier type wattmeter. The phase shift operation requires the corresponding hardwire which may result in the additional measurement error [6]. An electronic shifter based on stochastic signal processing for simple and cost-effective digital implementation of a reactive power and energy meter was developed in [7]. A new application of the least error squares estimation algorithm for identifying the reactive power from available samples of voltage and current waveforms in the time domain for sinusoidal and non sinusoidal signals is proposed in [8]. In [9] different RP measurement methods are described. The common drawback of the described methods is related to the necessity of measuring of the RMS values of the voltage and current. The 2-Dimensional digital FIR filtering based algorithms for measuring of the RP are proposed in [10]. The development of a method using artificial neural networks to evaluate the instantaneous reactive power is described in [11]. In this method the back-propagation neural network is used to approximate the reactive

doi:10.4304/jcp.5.12.1870-1877

power evaluation function. In [12] the digital infinite impulse response filters are used to measure the reactive power. Although proposed algorithm allows to evaluate the harmonic components of the RP, the suggested method is still complex because the performing of the filtering procedures.

The Fourier transform (FT) based digital or analogue filtering algorithms allow the evaluation of RP without shifting operation, but a large number of multiplication and addition operations are required when applying FT algorithms for RP evaluation. For example, for a 16 point DFT $16^2 = 256$ complex multiplications and $16 \times 15 = 240$ complex addition operations are required [13]. The various algorithms (for example FFT known as the Cooley Tukay algorithm) have been developed to reduce the number of multiplication and addition operations by use of the computational redundancy inherent in the DFT. Unfortunately, FT based algorithms are still computationally complex.

For unbalanced systems, the symmetrical components can be used and the analysis can be done separately for the zero-sequence, positive-sequence, and negative-sequence networks[14], [15]. References [2], [16] suggest the positive, negative and zero sequence components evaluation based algorithm for measuring RP in three-phase circuits. Main drawback of this algorithm is related to the complex operations required for evaluation of voltage and current symmetrical components.

In[17] the authors have analyzed WT algorithms employed to energy measurement process and they have shown that the Walsh method represents its intrinsic high-level accuracy due to coefficient characteristics in energy staircase representation. Reference [18] states that decimation algorithm based on fast WT(FWT) has better performance due to the elimination of multiplication operation and low or comparable hardware complexity because of the FWT transform kernel.

In [10] the WF based existing RP measurement algorithm is cited. The basic idea of this WF based algorithm consists in the resolving of the voltage and current signals separately along the WFs, at first, and then obtaining the RP as the difference of the products of the quadrature components. At least four multiplication-integration, two multiplication, and one summation operations required for RP evaluation makes this algorithm comparatively complex and less convenient for implementation.

In previous research works [19]-[23] the WF based RP measurement method and some aspects of its realization [19], a modified WF based method for the measurement of reactive power in sinusoidal as well as in noise conditions with the immunity to the distortion power [20], a new algorithm for evaluation the reactive components from instantaneous power signal and its realization on the electronic elements [21], the effect of the harmonics on the WF based RP measurement algorithm and problems related to the estimation and correction of the error introduced by harmonics [22], the signal processing based frequency insensitive RP measurement algorithms involving peculiar properties of the WF[23] have been investigated and proposed.

All of these methods and algorithms can be applied to both the single-phase and the balanced three-phase systems.

Measurement of RP in unbalanced tree-phase systems has own specific peculiarities. In unbalanced power systems the RP may be caused by the unbalances only and the RP can be inductive or capacitive, and so can be added or can compensate the traditional reactive power due to the reactances. Moreover, the RP can have values different from zero even in resistive systems, when there are unbalances at sources and at loads in the same time, and generally when there is not any symmetry in the system [4]. That is why, the investigations and development of the RP measurement methods and algorithms applicable to the unbalanced three-phase systems are of the important scientific problems.

The main contribution of this article is the development of the algorithms for evaluating the RP from instantaneous power signal in balanced and unbalanced three-phase systems using WF_s, thereby, avoiding the phase shift operation of $\pi/2$ between the voltage and the current waveforms in respective phases of three-phase system.

The attraction of WF based approach to RP evaluation in three-phase systems comes from the key advantages such as following[23]:

a multiplication operation between tow digital data is replaced with the multiplication operation between digital data and positive or negative unit(+1 or -1). In other words, the multiplication operation is performed by simple altering the sign of the given digital data from positive to the negative sign so that to be multiplied by -1. Thus, the WT analyzes signals into rectangular waveforms rather than sinusoidal ones and is computed more rapidly than, for example, FFT [13]. WT based algorithm contains additions and subtractions only and as a result considerably simplifies the hardware implementation of RP evaluation;

a requirement of IEEE/IEC definition of a phase shift of $\pi/2$ between the voltage and the current signals, typical for reactive power evaluation[6] is eliminated from signal processing operation.

The paper is organized as follows. In section two a derivation of the WF based analogue signal processing algorithms for measurement of RP in three-phase systems is described. The simulation results and discussions are given in the section three. Section four includes the conclusion of the paper.

II. Signal Processing Algorithms for Three-Phase RP Evaluation

In this section we analyze the RP algorithms for the measuring the RP in three-phase power system.

A. Measurement algorithm for a phase reactive power

To obtain the algorithm for measuring the reactive power in phase *a,* we multiply both sides of Eq. A9 (See Appendix) by the third order WF [23], $Wal(3,t)$ and integrate over the period T of power system frequency:

$$\frac{1}{T}\int_0^T Wal(3,t)\,p_a dt = \frac{1}{T}\int_0^T Wal(3,t)\left[P_a - \left(P_a \cos 2\omega t + Q_a \sin 2\omega t\right)\right]dt \tag{1}$$

This Eq. can be rewritten as

$$\frac{1}{T}\int_0^T Wal(3,t)\,p_a dt = \frac{1}{T}\int_0^T Wal(3,t)P_a dt - \frac{1}{T}\int_0^T Wal(3,t)P_a \cos 2\omega t dt - \int_0^T Wal(3,t)Q_a \sin 2\omega t dt \tag{2}$$

Since [23],

$$\frac{1}{T}\int_0^T Wal(3,t)P_a dt = 0 \;,\; \frac{1}{T}\int_0^T Wal(3,t)P_a \cos 2\omega t dt = 0 \tag{3}$$

and the (2) is rewritten as (See [23] for details)

$$\frac{1}{T}\int_0^T Wal(3,t)\,p_a dt = -\frac{1}{T}\int_0^T Wal(3,t)Q_a \sin 2\omega t dt \tag{4}$$

or [23],

$$\frac{1}{T}\int_0^T Wal(3,t)\,p_a dt = -\frac{2}{\pi}Q_a \tag{5}$$

Solution of this equation for the *a* phase fundamental reactive power Q_a results in

$$Q_a = -\frac{\pi}{2T}\int_0^T Wal(3,t)\,p_a dt \tag{6}$$

B. Measurement algorithm for b phase reactive power

In case of phase *b* we multiply both sides of Eq.(A14) (See Appendix) by the third order WF and integrate over the period of T:

$$\frac{1}{T}\int_0^T Wal(3,t)\,p_b dt = \frac{1}{T}\int_0^T P_b Wal(3,t)dt - \frac{1}{T}\int_0^T Wal(3,t)\left[P_b \cos 240° - Q_b \sin 240°\right]\cos(2\omega t)dt - \frac{1}{T}\int_0^T Wal(3,t)\left[Q_b \cos 240° + P_b \sin 240°\right]\sin(2\omega t)dt \tag{7}$$

Similar to the (3), we write (See [23] for details)

$$\frac{1}{T}\int_0^T Wal(3,t)P_b dt = 0$$

and

$$\frac{1}{T}\int_0^T Wal(3,t)\left[P_b \cos 240° - Q_b \sin 240°\right]\cos(2\omega t)dt = 0$$

Considering these in (7) we have

$$\frac{1}{T}\int_0^T Wal(3,t)\,p_b dt = -\frac{1}{T}\int_0^T Wal(3,t)\left[Q_b \cos 240° + P_b \sin 240°\right]\sin(2\omega t)dt$$

Considering the solution of the right side integral (See [23] for details)of this Eq. we have

$$\frac{1}{T}\int_0^T Wal(3,t)\,p_b dt = -\frac{2}{\pi}\left[Q_b \cos 240° + P_b \sin 240°\right] \tag{8}$$

Solution of this equation for the *b* phase RP, Q_b results in

$$Q_b = -\frac{\pi}{T}\int_0^T Wal(3,t)\,p_b dt - \sqrt{3}P_b \tag{9}$$

C. Measurement algorithm for c phase reactive power

For the phase *c* we multiply both sides of Eq.(A19) (See Appendix) by the third order WF and integrate over the period T:

$$\frac{1}{T}\int_0^T Wal(3,t)\,p_c dt = \frac{1}{T}\int_0^T Wal(3,t)P_c dt - \frac{1}{T}\int_0^T Wal(3,t)\left[P_c \cos 240° + Q_c \sin 240°\right]\cos(2\omega t)dt - \frac{1}{T}\int_0^T Wal(3,t)\left[Q_c \cos 240° - P_c \sin 240°\right]\sin(2\omega t)dt \tag{10}$$

Similar to the Eq.(3), we write

$$\frac{1}{T}\int_0^T Wal(3,t)P_c dt = 0$$

and

$$\frac{1}{T}\int_0^T Wal(3,t)\left[P_c \cos 240° + Q_c \sin 240°\right]\cos(2\omega t)dt = 0\,.$$

Considering these, the (10) is rewritten as follows

$$\frac{1}{T}\int_0^T Wal(3,t)\,p_c dt = -\frac{1}{T}\int_0^T Wal(3,t)\left[Q_c\cos 240° - P_c \sin 240°\right]\sin(2\omega t)dt \quad (11).$$

Considering the solution of the right side integral of this Eq. we have

$$\frac{1}{T}\int_0^T Wal(3,t)\,p_c dt = -\frac{2}{\pi}\left[Q_c\cos 240° - P_c \sin 240°\right] \quad (12)$$

Solution of (12) for the *c* phase RP, Q_c results in

$$Q_c = -\frac{\pi}{T}\int_0^T Wal(3,t)\,p_c dt + \sqrt{3}P_c \quad (13)$$

As seen from the right hand sides of the (9) and (13), evaluation of the *b* and *c* phase reactive powers Q_b, Q_c requires the *b* and *c* phase active powers P_b and P_c, respectively.

To find the relationships between the active powers of P_b and P_c, and the respective instantaneous powers of p_b and p_c, we multiply both sides of each of the (A14) and (A19) (See Appendix) by the zero-order WF, $Wal(0,t)$, and integrate over the period of T:

$$\frac{1}{T}\int_0^T Wal(0,t)\,p_b dt = \frac{1}{T}\int_0^T P_b Wal(0,t)dt - \frac{1}{T}\int_0^T Wal(0,t)\left[P_b\cos 240° - Q_b \sin 240°\right]\cos(2\omega t)dt - \frac{1}{T}\int_0^T Wal(0,t)\left[Q_b\cos 240° + P_b \sin 240°\right]\sin(2\omega t)dt \quad (14)$$

$$\frac{1}{T}\int_0^T Wal(0,t)\,p_c dt = \frac{1}{T}\int_0^T Wal(0,t)P_c dt - \frac{1}{T}\int_0^T Wal(0,t)\left[P_c\cos 240° + Q_c \sin 240°\right]\cos(2\omega t)dt - \frac{1}{T}\int_0^T Wal(0,t)\left[Q_c\cos 240° - P_c \sin 240°\right]\sin(2\omega t)dt \quad (15)$$

Since $Wal(0,t)$ equals to the +1 over the full period of T, the integral terms on the right hand sides of (14) and (15) that involve $\cos 2\omega t$ and $\sin 2\omega t$, converge to zero(See [23] for details). Thus

$$\frac{1}{T}\int_0^T Wal(0,t)\,p_b dt = \frac{1}{T}\int_0^T P_b Wal(0,t)dt \quad (16)$$

$$\frac{1}{T}\int_0^T Wal(0,t)\,p_c dt = \frac{1}{T}\int_0^T P_c Wal(0,t)dt \quad (17)$$

Taking into account the properties of zero-order WF mentioned above, we get from (16) and (17) the relationships between the active powers of P_b and P_c, and the respective instantaneous powers of p_b and p_c, respectively:

$$P_b = \frac{1}{T}\int_0^T Wal(0,t)\,p_b dt \quad (18)$$

$$P_c = \frac{1}{T}\int_0^T Wal(0,t)\,p_c dt \quad (19)$$

Substituting the (18) and (19) into the (9) and (13), respectively, we get the final expressions for evaluating *b* and *c* phase reactive powers Q_b and Q_c as

$$Q_b = \frac{\pi}{T}\int_0^T Wal(3,t)\,p_b dt - \sqrt{3}\frac{1}{T}\int_0^T Wal(0,t)\,p_b dt \quad (20)$$

and

$$Q_c = \frac{\pi}{T}\int_0^T Wal(3,t)\,p_c dt + \sqrt{3}\frac{1}{T}\int_0^T Wal(0,t)\,p_c dt \quad (21)$$

III. Simulation Results and Discussions

A simulation circuit of the three phase reactive power measurement instrument, which is based on the proposed algorithms given by (6), (20), and (21), has been built (Fig.1). Simulation tests were aimed at verifying (i) the practicability and validity of the proposed algorithms, (ii) an effect of the load unbalance on the accuracy of the RP measurement results, and (iii) the good performance characteristics of the measurement instrument in wide range variation of the unbalanced load. Simulation experiments have been performed by use of the tools of the "Matlab 6.5".

During simulation the line-to-neutral voltages were taken as follows

$$V_a = 220\angle 0°V,\ V_b = 220\angle -120°V,\ \text{and}\ V_c = 220\angle 120°V.$$

The unbalanced load impedances have been changed to cover the range of

a) $Z_a = 30 + j20\Omega$; $Z_b = 50 + j15\Omega$; $Z_c = 15 + j6\Omega$

b) $Z_a = 20 + j15\Omega$; $Z_b = 12 + j60\Omega$; $Z_c = 18 + j30\Omega$

c) $Z_a = 25 + j40\Omega$; $Z_b = 20 + j50\Omega$; $Z_c = 14 + j30\Omega$

The simulation results are represented on the Tables I, II, and III. The true values of three-phase RP for the different loads have been calculated by use of the classical algorithms [2], [3]. Comparison the measurement results obtained by use of the proposed method with the true values shows that the relative error introduced by the proposed method is less than 0.09%.

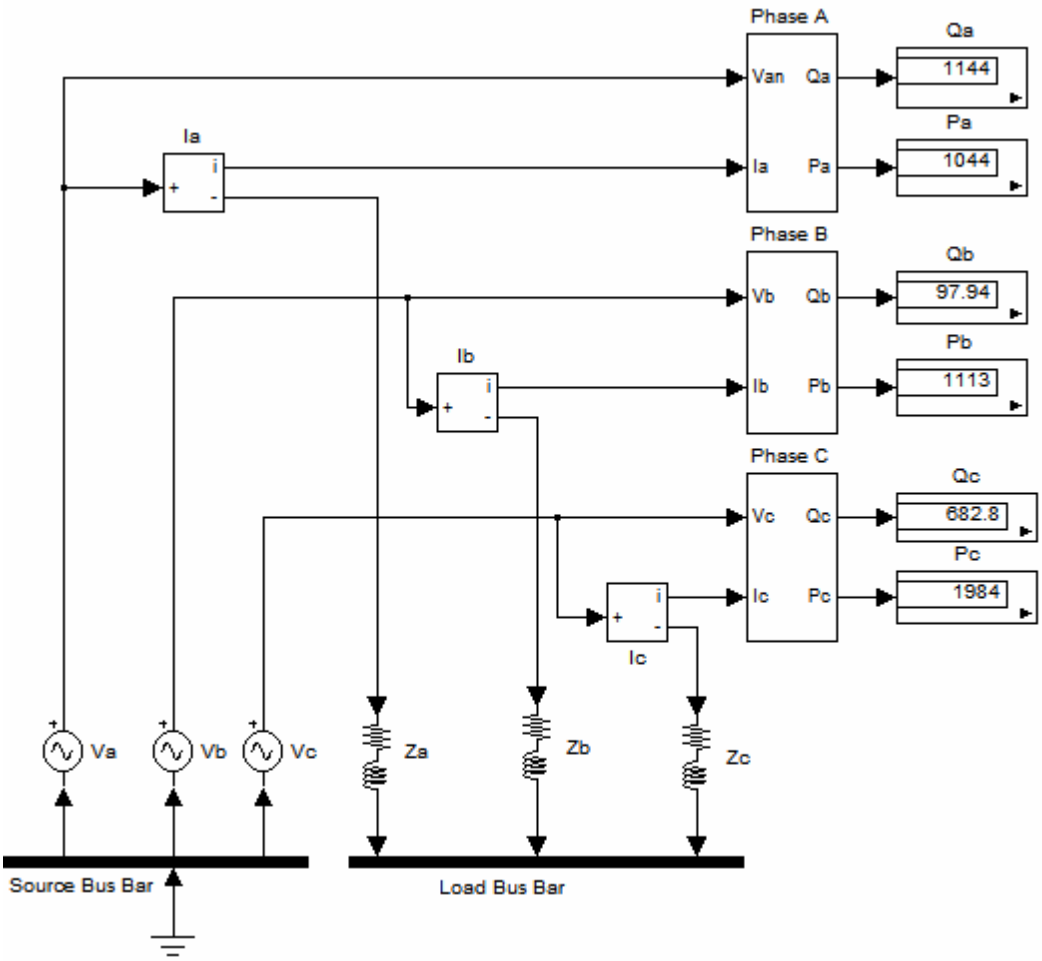

Figure 1. The simulation structure for the realization of the active and reactive power measurement algorithms.

TABLE I
THE SIMULATION RESULTS OF RP EVALUATION ALGORITHMS :
UNBALANCED LOAD PARAMETERS: $Z_a = 30 + j20\Omega; Z_b = 50 + j15\Omega; Z_c = 15 + j6\Omega$

	Classical formula				Proposed method				Error,%
	Phase A	Phase B	Phase C	Total	Phase A	Phase B	Phase C	Total	
Active Power	1044.25	1113.10	1984.15	4141.50	1044	1113	1984	4141	0.012
Reactive Power	1144.33	98.777	681.177	1924.28	1144	97.94	682.8	1924.74	0.024

TABLE II
THE SIMULATION RESULTS OF RP EVALUATION ALGORITHMS
UNBALANCED LOAD PARAMETERS: $Z_a = 20 + j15\Omega; Z_b = 12 + j60\Omega; Z_c = 18 + j30\Omega$

	By classical formula				By suggested method				Error,%
	Phase A	Phase B	Phase C	Total	Phase A	Phase B	Phase C	Total	
Active Power	892.8	233.85	955.34	2062.19	892.1	233.5	935.2	2060.8	0.067
Reactive Power	1495.74	1065.95	710.173	3271.86	1495	1065	710.6	3270.6	0.038

TABLE III
THE SIMULATION RESULTS OF RP EVALUATION ALGORITHMS
UNBALANCED LOAD PARAMETERS: $Z_a = 25 + j40\Omega; Z_b = 20 + j50\Omega; Z_c = 14 + j30\Omega$

	By classical formula				By suggested method				Error,%
	Phase A	Phase B	Phase C	Total	Phase A	Phase B	Phase C	Total	
Active Power	408.83	499.67	560.21	1468.71	408.4	499.3	559.8	1467.5	0.082
Reactive Power	1022.794	900.446	1040.297	2963.54	1022	899.3	1040	2961.3	0.076

IV. CONCLUSIONS

A variety of methods to measure the RP in the three-phase systems were developed. In presented method the requirement of IEEE/IEC definition of a phase shift of $\pi/2$ between the voltage and the current signals, typical for reactive power evaluation, is eliminated from signal processing operation. Three phase RP is evaluated without the phase-shift operation to achieve increased efficiency of computational operations and hardware implementation;

The multiplication of the sample values of the instantaneous power signal by corresponding order WF is performed simply, by alteration of sign of the signal samples from +1 to -1 only during even quarters of the input signal periods;

Proposed algorithms allow the measurement of three phase power in balanced as well as in unbalanced three phase systems.

The author is currently working towards the estimation and correction of the highest order harmonic distortions influence on the proposed three phase RP evaluation algorithms.

APPENDIX . INSTANTANEOUS POWER IN THREE-PHASE UNBALANCED SYSTEMS

In three-phase unbalanced systems the three currents I_a, I_b, and I_c, in respective phases do not have equal magnitudes, nor are they shifted exactly with respect to each other [2].

The instantaneous line-to-neutral voltages v_a, v_b, and v_c in the respective phases are as follows:

$$\begin{aligned} v_a &= \sqrt{2}V_a \sin(\omega t) \\ v_b &= \sqrt{2}V_b \sin(\omega t - 120°) \\ v_c &= \sqrt{2}V_c \sin(\omega t + 120°). \end{aligned} \tag{A1}$$

where V_a, V_b, and V_c are the rms values of the line to neutral voltages for the phases a, b, and c, respectively, $\omega = 2\pi f$ is the angular frequency in rad/s, f is the frequency in Hz.

The line currents i_a, i_a, and i_a in the phases a, b, and c, respectively, are as follows:

$$\begin{aligned} i_a &= \sqrt{2}I_a \sin(\omega t - \theta_a) \\ i_b &= \sqrt{2}I_b \sin(\omega t - \theta_b - 120°) \\ i_c &= \sqrt{2}I_c \sin(\omega t - \theta_c + 120°). \end{aligned} \tag{A2}$$

where θ_a, θ_b, and θ_c are the impedance angles in the phase a, b, and c, respectively.

The three-phase instantaneous power p_t is given by [2]:

$$p_t = v_a i_a + v_b i_b + v_c i_c \tag{A3}$$

or

$$p_t = p_a + p_b + p_c, \tag{A4}$$

where p_a, p_b, p_c are the respective phase instantaneous powers.

A. Instantaneous power in phase a

Considering (A1) and (A2) the a phase instantaneous power p_a is expressed as

$$\begin{aligned} p_a &= v_a i_a = \sqrt{2}V_a \sin(\omega t)\sqrt{2}I_a \sin(\omega t - \theta_a) \\ &= 2V_a I_a \sin(\omega t)\sin(\omega t - \theta_a) \end{aligned} \tag{A5)}$$

where I_a, I_b, and I_c are the are the rms values of the line currents in the phases a, b, and c, respectively.

Applying the trigonometric identity of

$$2\sin\alpha\sin\beta = \cos(\alpha - \beta) - \cos(\alpha + \beta) \tag{A6}$$

to the (A5) we have

$$p_a = V_a I_a \cos\theta - V_a I_a \cos(2\omega t - \theta_a) \tag{A7}$$

Since

$$\cos(2\omega t - \theta_a) = \cos 2\omega t \cos\theta_a + \sin 2\omega t \sin\theta_a, \tag{A8}$$

the (A7) is deduced to

$$p_a = V_a I_a \cos\theta - [V_a I_a \cos\theta_a \cos 2\omega t + V_a I_a \sin\theta_a \sin 2\omega t]$$

This Eq. can be rewritten as

$$p_a = P_a - [P_a \cos 2\omega t + Q_a \sin 2\omega t] \tag{A9}$$

where $P_a = V_a I_a \cos\theta_a$ is the average or active, and $Q_a = V_a I_a \sin\theta_a$ the fundamental reactive power, respectively, in the phase *a*.

B. Instantaneous power in phase b

An instantaneous power in phase *b* is expressed by using (A1) and (A2), as follows

$$\begin{aligned} p_b &= v_b i_b \\ &= \sqrt{2}V_b \sin(\omega t - 120°)\sqrt{2}I_b \sin(\omega t - 120° - \theta_b) \\ &= 2V_b I_b \sin(\omega t - 120°)\sin(\omega t - 120° - \theta_b) \end{aligned} \tag{A10}$$

Considering the trigonometric identity of (A6) in (A10) we have

$$\begin{aligned} p_b &= V_b I_b [\cos\theta_b - \cos(2\omega t - 240° - \theta_b)] \\ &= V_b I_b \cos\theta_b - V_b I_b \cos(2\omega t - 240° - \theta_b) \end{aligned} \tag{A11}$$

Since

$$\begin{aligned} &\cos(2\omega t - 240° - \theta_b) \\ &= \cos(2\omega t - 240°)\cos\theta_b + \sin(2\omega t - 240°)\sin\theta_b, \end{aligned}$$

the (A11) is deduced to

$$p_b = P_b - [P_b \cos(2\omega t - 240°) + Q_b \sin(2\omega t - 240°)] \quad \text{(A12)}$$

where $P_b = V_b I_b \cos\theta_b$ is the average or active, and $Q_b = V_b I_b \sin\theta_b$ the fundamental reactive power, respectively, in the phase *b*.
Since

$$\cos(2\omega t - 240°) = \cos(2\omega t)\cos 240° + \sin 2\omega t \sin 240°,$$

$$\sin(2\omega t - 240°) = \sin(2\omega t)\cos 240° - \cos 2\omega t \sin 240°,$$

The (A12) is rewritten as

$$p_b = P_b - [P_b \cos(2\omega t)\cos 240° + P_b \sin(2\omega t)\sin 240°] - [Q_b \sin(2\omega t)\cos 240° - Q_b \cos(2\omega t)\sin 240°] \quad \text{(A13)}$$

Grouping the right hand side terms of (13) by $\cos(2\omega t)$ and $\sin(2\omega t)$ we obtain required expression for the *b* phase instantaneous power as

$$p_b = P_b - [P_b \cos 240° - Q_b \sin 240°]\cos(2\omega t) - [Q_b \cos 240° + P_b \sin 240°]\sin(2\omega t) \quad \text{(A14)}$$

C. Instantaneous power in phase c

An expression for *c* phase instantaneous power is derived in a similar fashion to the *b* phase power. Using (A1) and (A2) an instantaneous power in phase *c* is expressed as

$$\begin{aligned} p_c &= v_c i_c \\ &= \sqrt{2}V_c \sin(\omega t + 120°)\sqrt{2}I_c \sin(\omega t + 120° - \theta_c) \\ &= 2V_c I_c \sin(\omega t + 120°)\sin(\omega t + 120° - \theta_c) \end{aligned} \quad \text{(A15)}$$

Application the trigonometric identity of (A6) to (A15) results in

$$p_c = V_c I_c \cos\theta_c - V_c I_c \cos(2\omega t + 240 - \theta_c). \quad \text{(A16)}$$

Since

$$\begin{aligned} &\cos(2\omega t + 240° - \theta_c) \\ &= \cos(2\omega t + 240°)\cos\theta_c + \sin(2\omega t + 240°)\sin\theta_c, \end{aligned}$$

the (A16) is deduced to

$$p_c = P_c - [P_c \cos(2\omega t + 240°) + Q_c \sin(2\omega t + 240°)] \quad \text{(A17)}$$

where $P_c = V_c I_c \cos\theta_c$ is the average or active, and $Q_c = V_c I_c \sin\theta_c$ the fundamental reactive power, respectively, in the phase *c*.
Since

$$\cos(2\omega t + 240°) = \cos(2\omega t)\cos 240° - \sin 2\omega t \sin 240°,$$

$$\sin(2\omega t + 240°) = \sin(2\omega t)\cos 240° + \cos 2\omega t \sin 240°,$$

the (A17) is rewritten as follows

$$p_c = P_c - [P_c \cos(2\omega t)\cos 240° - P_c \sin(2\omega t)\sin 240°] - [Q_c \sin(2\omega t)\cos 240° + Q_c \cos(2\omega t)\sin 240°] \quad \text{(18)}$$

Grouping the right hand side terms of (13) by $\cos(2\omega t)$ and $\sin(2\omega t)$ we obtain required expression for the *c* phase instantaneous power as

$$p_c = P_c - [P_c \cos 240° + Q_c \sin 240°]\cos(2\omega t) - [Q_c \cos 240° - P_c \sin 240°]\sin(2\omega t) \quad \text{(A19)}$$

The derived equations (A9), (A14), and (A19) express the instantaneous power in the respective phases of three-phase unbalanced system.

REFERENCES

[1] Fairney, W. "Reactive power-real or imaginary?", *Power Engineering Journal*,Volume 8, Issue 2, April 1994, pp.69 – 75.

[2] IEEE Std. 1459-2000, "IEEE Trial Use Standard Definitions for the Measurement of Electric Power Quantities Under Sinusoidal, Non-Sinusoidal, Balanced, or Unbalanced Conditions", Institute of Electrical and Electronics Engineers / 01-May-2000 / 52 pages.

[3] James W. Nilsson, Susan A. Riedel. Electrical Circuits. 7th Edition. Prentice Hall. 2005.

[4] Vicente León-Martínez, Joaquín Montañana-Romeu, José Giner-García, Antonio Cazorla-Navarro, José Roger-Folch, Manuel A. Graña-López, "Power Quality Effects on the Measurement of Reactive Power in Three-Phase Power Systems in the Light of the IEEE Standard 1459-2000". *The 9th International conference. Electric power quality and Utilisation*, Barcelona 9-11 October 2007.

[5] W.-K. Yoon and M.J. Devaney. "Reactive Power Measurement Usinq the Wavelet Transform", *IEEE Trans. Instrum. Meas.*,vol. 49, pp 246-252, April 2000.

[6] Branislav Djokic, Eddy So, and Petar Bosnjakovic. "A High Performance Frequency Insensitive Quadrature Phase Shifter and Its Application in Reactive Power Measurements" *IEEE Trans. Instrum. Meas.*,vol. 49, pp 161-165, February 2000.

[7] S.L.Toral, J.M.Quero and L.G.Franquelo. "Reactive power and energy measurement in the frequency domain using random pulse arithmetic", *IEE Proc.-Sci. Technol.*, vol. 148, No. 2, pp.63-67, March 2001.

[8] Soliman S.A., Alammari R.A., El-Hawary M.E., Mostafa M.A. "Effects of harmonic distortion on the active and reactive power measurements in the time domain: a single phase system" *Power Tech Proceedings, 2001 IEEE* Porto, Volume 1, 10-13 Sept. 2001, 6 pp.

[9] Munday M., Hart D.G. "Methods for electric power measurements", IEEE *Power Engineering Society Summer Meeting,* , Vol.3, pp 1682 -1685, July 2002.

[10] M. Kezunovic, E. Soljanin, B. Perunicic, S. Levi, " New approach to the design of digital algorithms for electric power measurements", *IEEE Trans. on Power Delivery*, vol. 6, No 2, pp. 516–523,Apr. 1991.

[11] T.W.S.Chow and Y.F.Yam. "Measurement and evaluation of instantaneous reactive power using neural networks", *IEEE Transactions on Power Delivery*, Vol. 9, No. 3, July 1994, pp.1253-1260.

[12] Ozdemir and A. Ferikoglu. " Low cost mixed-signal microcontroller based power measurement technique", *IEE Proc.-Sci. Meas. Technol.*, Vol. 151, No. 4, July 2004,pp.253-258.

[13] Emmanuel C. Ifeachor, Barrie W. Jervis. *Digital Signal Processing. A practical Approach.* Second Edition. Prentice Hall,2002.

[14] H. Wayne Beaty. *Handbook Of Electric Power Calculations*. Third Edition, MCGRAW-HILL, 2001.

[15] Mohamed E. El-Hawary. *Electrical Energy Systems*. 2000 by CRC Press LLC.

[16] J.-C.MontaRo and PSaImeron, "Identification of instantaneous current components in three-phase systems" *IEE Proc.-Sci. Meas. Technol., Vol. 146, No. 5, September 1999,pp. 227-233.*

[17] Brandolini A., Gandelli A., Veroni F. "Energy meter testing based on Walsh transform algorithms", *Instrumentation and Measurement Technology Conference*, 1994. Conference roceedings, 10-12 May 1994, pp 1317 – 1320, vol.3.

[18] Bai liyun, Wen biyang, Shen wei, and Wan xianrong. "Sample rate conversion using Walsh-transform for radar receiver", *Microwave Conference Proceedings*, 2005. APMC 2005. Asia-Pacific Conference Proceedings.Volume 1, 4-7 Dec. 2005, 4 pp.

[19] Abiyev R, H., Abiyev A. N., Kamil D. "The Walsh Functions Based Method for Reactive Power Measurement", Proceedings of the *33rd Annual Conference of the IEEE Industrial Electronics Society (IECON'07)*, Taipei, Taiwan, Nov. 5-8, 2007, pp. 2337-2342.

[20] Adalet N. Abiyev, "A new signal processing technique for evaluation of the reactive power in the power transmission and distribution systems", in Proceeding of *Southeastcon 2008, IEEE,* Hantsville, AL, USA., April 3-6, 2008, pp. 356-361.

[21] Adalet N Abiyev, "A new electronic reactive power meter based on Walsh Transform algorithms", in Proceeding of IEEE *Transmission and Distribution Conference and Exposition, 2008 (T&D. IEEE/PES*), Chicago, IL, USA, April 21-24, 2008, pp. 1-7.

[22] Adalet N. Abiyev, Kamil Dimililer, "Reactive Power Measurement in Sinusoidal and Nonsinusoidal Conditions by Use of the Walsh Functions", in Proceedings of I^2MTC 2008 - IEEE *International Instrumentation and Measurement Technology Conference,* Victoria, Vancouver Island, Canada, May 12-15, 2008,pp. 89-94.

[23] Adalet Abiyev, "A New Signal Processing based Method for Reactive Power Measurements", *Journal Of Computers*, vol. 4, no. 7, 2009, pp. 623-630.

Adalet Abiyev was born in Azerbaijan, in 1952. Received Electrical Engineer degree and Ph.D degree in Electrical and Electronic Engineering in 1975 and 1986, respectively, both from the Azerbaijan State Oil Academy(ASOA). From 1986 to 1990 he was assistant professor and then from 1991 to 2005-associate professor at the department of "Automatics, Remote Control and Electronic" of ASOA. From 2006-present he is working as associate professor at the department of Electrical and Electronic Engineering of the Girne American University. His research interests are electronic power measurements, analogue and digital signal processing, testing and diagnosing of induction motors during mass production.

Dr. Abiyev is the member of IEEE, has published two books and more than 80 scientific papers in the electrical and electronics engineering fields.